07

Wood Solutions™
design and build
woodsolutions.com.au

**This guide was revised in Sept 2015**
Please check woodsolutions.com.au/publications to ensure you have the latest edition

# Plywood Box Beam Construction for Detached Housing

Technical Design Guide issued by Forest and Wood Products Australia

## WoodSolutions Technical Design Guides

A growing suite of information, technical and training resources, the Design Guides have been created to support the use of wood in the design and construction of the built environment.

Each title has been written by experts in the field and is the accumulated result of years of experience in working with wood and wood products.

Some of the popular topics covered by the Technical Design Guides include:

- Timber-framed construction
- Building with timber in bushfire-prone areas
- Designing for durability
- Timber finishes
- Stairs, balustrades and handrails
- Timber flooring and decking
- Timber windows and doors
- Fire compliance
- Acoustics
- Thermal performance

## More WoodSolutions Resources

The WoodSolutions website provides a comprehensive range of resources for architects, building designers, engineers and other design and construction professionals.

***To discover more, please visit***
***www.woodsolutions.com.au***
***The website for wood.***

Wood Solutions™
design and build
woodsolutions.com.au

WoodSolutions is an industry initiative designed to provide independent, non-proprietary information about timber and wood products to professionals and companies involved in building design and construction.

WoodSolutions is resourced by Forest and Wood Products Australia (FWPA). It is a collaborative effort between FWPA members and levy payers, supported by industry peak bodies and technical associations.

This work is supported by funding provided to FWPA by the Commonwealth Government.

ISBN 978-1-920883-39-3

**Prepared by:**
Timber Development Association (NSW)
Suite 604, 486 Pacific Highway
St Leonards NSW 2065

First produced: December 2011
Revised: May 2012, September 2015

**© 2015 Forest and Wood Products Australia Limited.**
**All rights reserved.**

These materials are published under the brand WoodSolutions by FWPA.

**IMPORTANT NOTICE**

Whilst all care has been taken to ensure the accuracy of the information contained in this publication, Forest and Wood Products Australia Limited and WoodSolutions Australia and all persons associated with them (FWPA) as well as any other contributors make no representations or give any warranty regarding the use, suitability, validity, accuracy, completeness, currency or reliability of the information, including any opinion or advice, contained in this publication. To the maximum extent permitted by law, FWPA disclaims all warranties of any kind, whether express or implied, including but not limited to any warranty that the information is up-to-date, complete, true, legally compliant, accurate, non-misleading or suitable.

To the maximum extent permitted by law, FWPA excludes all liability in contract, tort (including negligence), or otherwise for any injury, loss or damage whatsoever (whether direct, indirect, special or consequential) arising out of or in connection with use or reliance on this publication (and any information, opinions or advice therein) and whether caused by any errors, defects, omissions or misrepresentations in this publication. Individual requirements may vary from those discussed in this publication and you are advised to check with State authorities to ensure building compliance as well as make your own professional assessment of the relevant applicable laws and Standards.

The work is copyright and protected under the terms of the Copyright Act 1968 (Cwth). All material may be reproduced in whole or in part, provided that it is not sold or used for commercial benefit and its source (Forest & Wood Products Australia Limited) is acknowledged and the above disclaimer is included. Reproduction or copying for other purposes, which is strictly reserved only for the owner or licensee of copyright under the Copyright Act, is prohibited without the prior written consent of FWPA.

WoodSolutions Australia is a registered business division of Forest and Wood Products Australia Limited.

# Table of Contents


| | |
|---|---|
| Introduction | 4 |
| Section 1: Engineers Certification | 5 |
| Section 2: Limitations and Beam Design Data | 6 |
| Section 3: Load Terminology Used in the Span Tables | 8 |
| Section 4: Beam Components and Fabrication | 12 |
| Section 5: Installation | 13 |
| Section 6: Span Tables | 16 |

# Introduction

**Plywood box beams are lightweight, simple to fabricate, conventionally stable and, with good design, structurally efficient and economical. The options provided in the following span tables are designed according to limit state design theory and for winds speeds up to N3. The span tables open up new options for beams incorporated into walls, portal frames and other typical long span applications.**

**Plywood webbed beams consist of flanges, webs and web stiffeners as shown in Figure 1.**

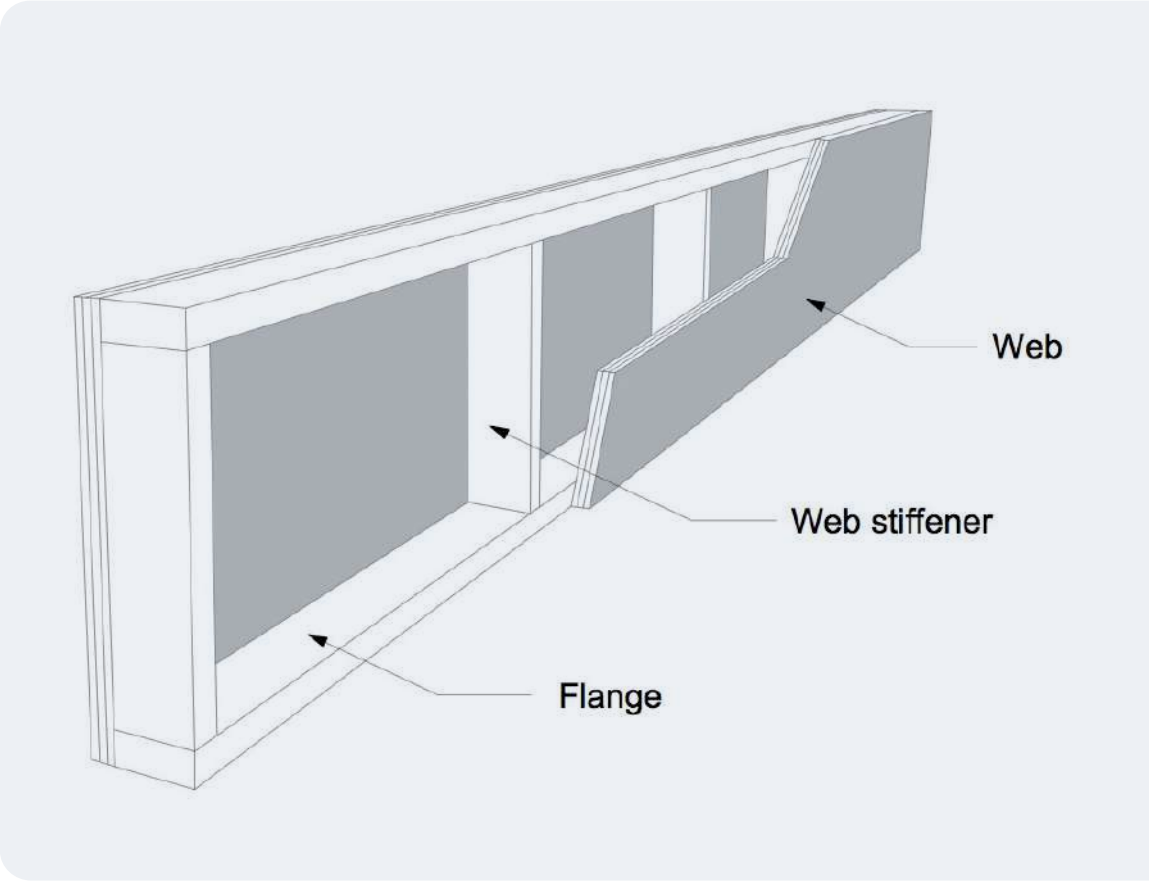


***Figure 1: Cut-away view of a plywood box beam***

# 1 Engineer's Certification

**ENGINEERED WOOD PRODUCTS ASSOCIATION OF AUSTRALASIA**

PRODUCT CERTIFIED

JAS-ANZ

www.jas-anz.com.au/register

**August 2008**

STRUCTURAL CERTIFICATION OF REVISED PLYWOOD SHEATHED
BOX BEAM SPAN TABLES

Due to modifications to design data in various codes the contents of:

***Plywood Box Beam Span Tables for Detached Housing Construction***

has been revisited. Necessary adjustments have been made to effected box beam spans through applications of the requirements of AS1684.1: 1999 in conjunction with Wind Code and AS1720.1: 2010 updates.

The new tables have been independently checked by the writer through rigorous application of the fundamental principles of structural analysis and design procedures. Checks were performed on box beam candidates randomly chosen from the range of structural applications.

The checking procedure involved the application of actions obtained from AS/NZS1170 Parts 0, 1 and 2 and implementation of design procedures detailed in AS1720.1: 2010. The factored wind speed (non-cyclonic) used for checking purposes assumes structures to be confined to Category 3 regions, subjected to wind from any direction, a shielding multiplier of 1.0 and to not be influences by adverse topographical situations.

If the structure's exposure to wind conditions violates any of the preceding restrictions, in particular those pertaining to wind, terrain and topographical conditions, the box beam, if to be utilised, must be designed by an engineer.

As a professional engineer, competent in the engineering of timber structures and their components, I certify the box beams referred to in this Manual as being structurally adequate regarding the specific requirements of AS1684.1: 1999.

C G "Mick" McDowall
M.Sc (Structures), Ass.Dip.M.E
MIWSc, RPEQ No 2463, MIEAust
CP Eng (1989-2010)

NCS INTERNATIONAL
CERTIFIED QUALITY MANAGEMENT SYSTEM

Plywood House 3 Dunlop St Newstead Qld Australia | PO Box 2108 Fortitude Valley BC Qld 4006
P: +617 3854 1228 | F: +617 3252 4769 | E: inbox@paa.asn.au | www.ewp.asn.au | ABN: 34 009 704 901

# 2 Limitations and Beam Design Data

**The criteria specified in this publication are specifically for conventional timber-framed buildings and applicable to single and two-storey constructions built within the limits or parameters below (Note: for any details not dealt with below assumptions and design conditions in AS1684 apply).**

**Wind classification**
Beam spans in the Span Tables are for wind loads up to N3 as described in AS4055 Wind Loads for Houses. For this wind classification the maximum building height limitation of 8500 mm, as given in AS4055, shall apply.

**Plan**
Building shapes shall be essentially rectangular, square, L-shaped or a combination of essentially rectangular elements including splayed-end and boomerang-shaped buildings.

**Number of storeys of timber framing**
The maximum number of storeys of timber framing shall not exceed two.

**Building Width**
The maximum width of a building shall be 16000 mm excluding eaves.

**Wall height**
The maximum wall height shall be 3000 mm floor to ceiling as measured at common external walls i.e. not gable or skillion ends.

**Roof pitch**
The maximum roof pitch shall be 35° (70:100).

**Roof type**
Roof construction shall be hip, gable, skillion, cathedral, trussed or pitched, or in any combination of these.

**Building masses**
Building masses appropriate for the member being designed shall be determined prior to selecting and designing from the Span Tables in this publication. Where appropriate, the maximum building masses relevant to the use of each member span table are noted under the Table. The roof mass shall be determined for the various types of roof construction for input to the Span Tables. For further guidance refer AS1684 Part 2, Appendix B. For counter beams, strutting beams, combined hanging strutting beams, and the like, the mass of roof framing is also accounted for in the Span Tables. The mass of a member being considered has been accounted for in the design of that member.

**Size Tolerances**
When using the Span Tables no (0 mm) undersize tolerances on timber sizes shall be permitted.

**Moisture content**
A moisture content of 15% or lower applies.

**Bearing**
The minimum bearing for specific beam members (bearers, lintels, hanging beams, strutting beams, combined strutting/hanging beams, counter beams, combined counter/strutting beams etc.) shall be as given in the Notes to the Span Tables. Unless indicated otherwise, all beams shall bear on their supporting element, a minimum of 35 mm at their ends or 70 mm at the continuous part of the member, by their full breadth (thickness). Reduced bearing area shall only be used where additional fixings are provided to give equivalent support to the members. Where the bearing area is achieved using a non-rectangular area such as a splayed joint, the equivalent bearing area shall not be less than that required above.

**Durability**
All span tables assume that the beam is to be located in an interior environment.

**Material Properties and Key Design Data**

The minimum structural properties adopted for timber flange and web stiffener materials are in accordance with Table 2.4 (for timber) and Table 5.1 (for Plywood) of AS1720.1. Timber Joint groups for various species are in accordance with Table 2.1 of AS1720.1. In addition, properties for LVL are handled separately below.

Laminated veneer lumber (LVL 10):

- Bending (f'b) 42 N/mm$^2$
- Tension (f't) 27 N/mm$^2$
- Shear (f's) 5.3 N/mm$^2$
- Compression (f'c) 40 N/mm$^2$
- Modulus of Elasticity (e) 10 700 N/mm$^2$

**Other assumptions**

- All beams are simply supported single spans
- Applied loads are static and applied vertically
- Applied loads for lintel and bearer beams have generally been input as evenly distributed discrete loads.
- Lintels have also been designed to include concentrated loads from roofs.
- Applied loads for strutting beams spanning perpendicular to the rafters and combined strutting and hanging beams have been input as discrete loads at every second rafters spacing (Note" Web stiffeners should be added at point load application points).
- Applied loads for strutting beams spanning parallel to the rafters have been input as a single mid-span load.
- Rafter and joist spacings 600 mm centres, maximum.
- All beams are required to be laterally restrained at their supports. Intermediate lateral restraint to the top edge of lintel and bearer beams is provided by the rafters or joists. Additional lateral restraint is required to strutting and combined hanging and strutting beams. Specific requirements are adjacent to individual Span Tables and guidance is also provided in Figure 13.
- Roof Load Width (RLW) and Floor Load Width (FLW) are measures of the width of the load area being supported by the member. Examples are shown for each being type.
- Roof Load Area (RLA) for strutting beams spanning parallel to the rafters is a measure of the load area being supported by the member.
- Span is defined as the face-to-face distance between points capable of giving full support to structural members.

# 3

# Load Terminology Used in the Span Tables

**Roof load width (RLW)**

RLW is used as a convenient indicator of the roof loads that are carried by some roof members and then by support structures such as lintels. Roof load width (RLW) is simply half the particular member's span, between support points, plus any overhang, and is measured on the rake of the roof.

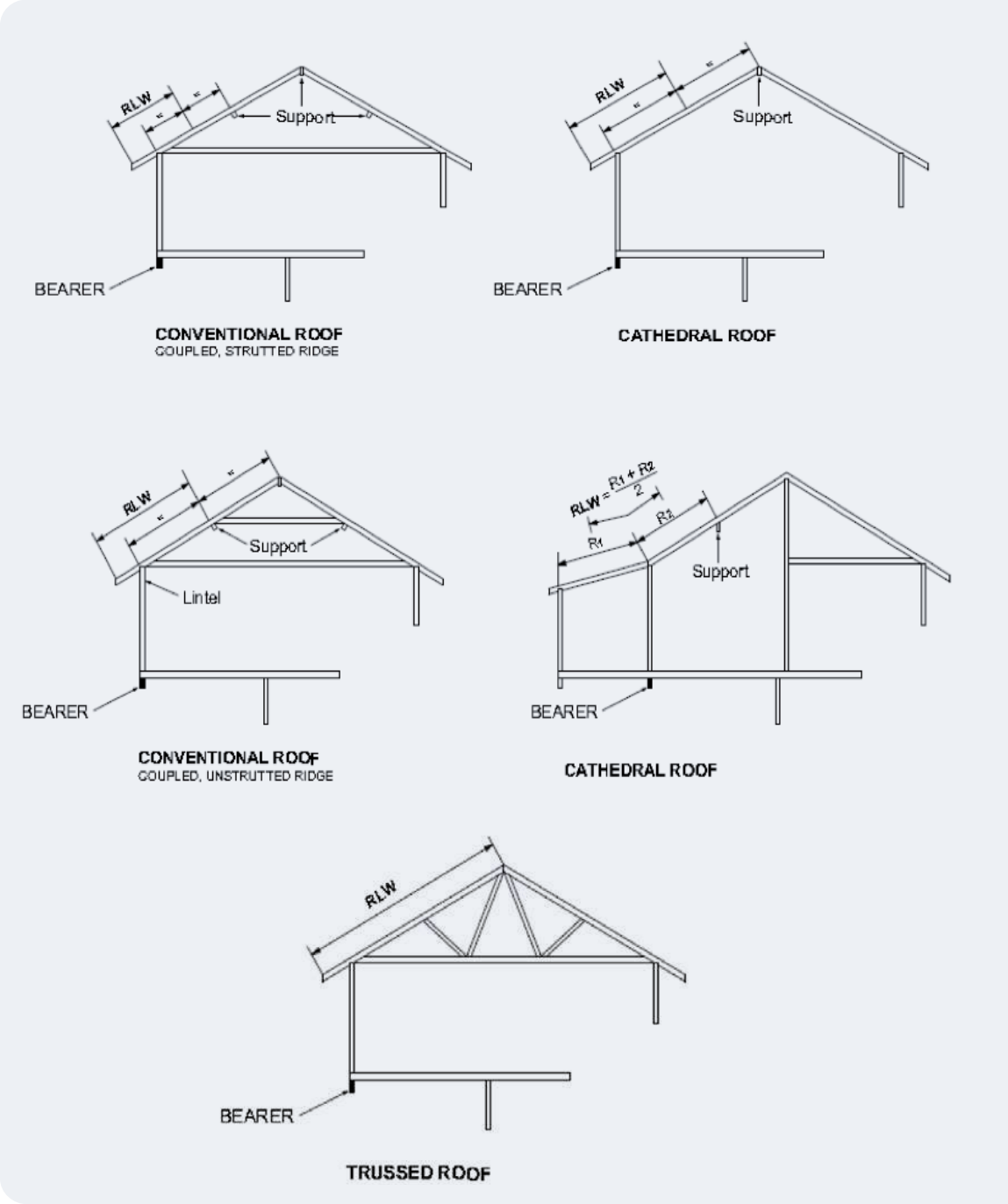


*Figure 2: Method for Calculating Roof Load Width for Lintels*

**Roof load area (RLA)**

The area supported by a member is the contributory area measured in the roof, that imparts load onto supporting members. The roof area shall be used as an input to Span Tables for strutting beams and combined strutting/hanging beams and combined strutting/counter beams. The typical roof area supported by strutting beams is shown in Figure 3.

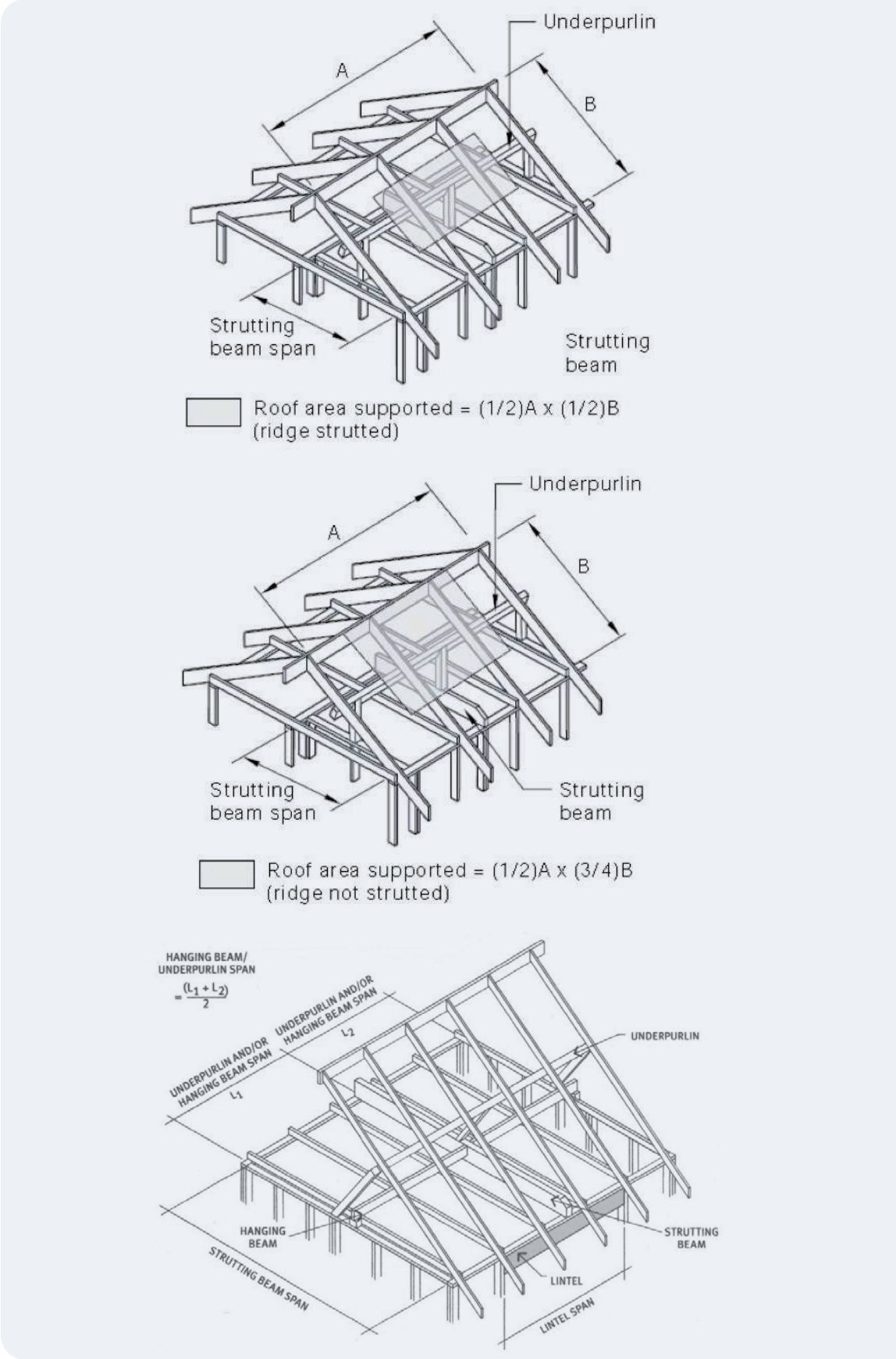


*Figure 3: Roof load area for Strutting beams (and similar)*

### Floor load width (FLW)

FLW is the contributory width of floor, measured horizontally, that imparts floor load to a bearer or similar. So floor load width (FLW) is simply half the floor joist span on either side of the bearer, added together. The only exception is where there is a cantilever. In this situation, the total cantilever distance is included.

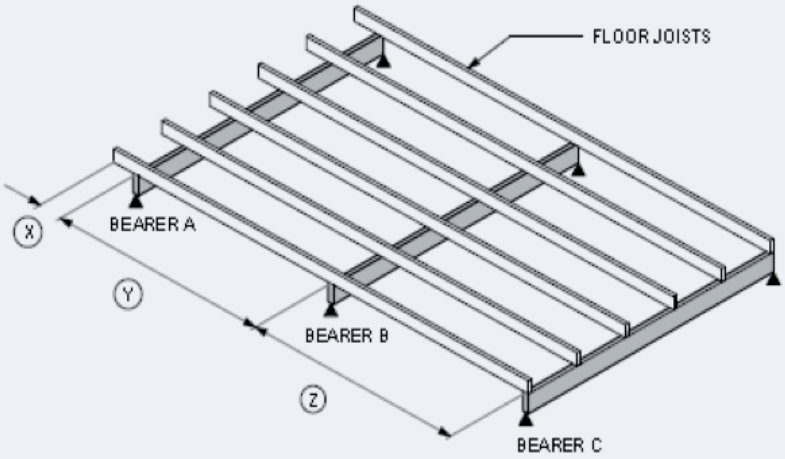


| BEARER | FLOOR LOAD WIDTH ' FLW' |
|---|---|
| A | $FLW = X + \frac{Y}{2}$ |
| B | $FLW = \frac{Y+Z}{2}$ |
| C | $FLW = \frac{Y}{2}$ |

*Figure 4: Method for Calculating Floor Load Width for Bearers*

### Ceiling load width (CLW)

Ceiling load width (CLW) is the contributory width of ceiling, usually measured horizontally, that imparts ceiling load to a supporting member. CLW shall be used as an input to Span Tables for counter beams and strutting/hanging beams. An example of its method of calculation is shown in Figure 5.

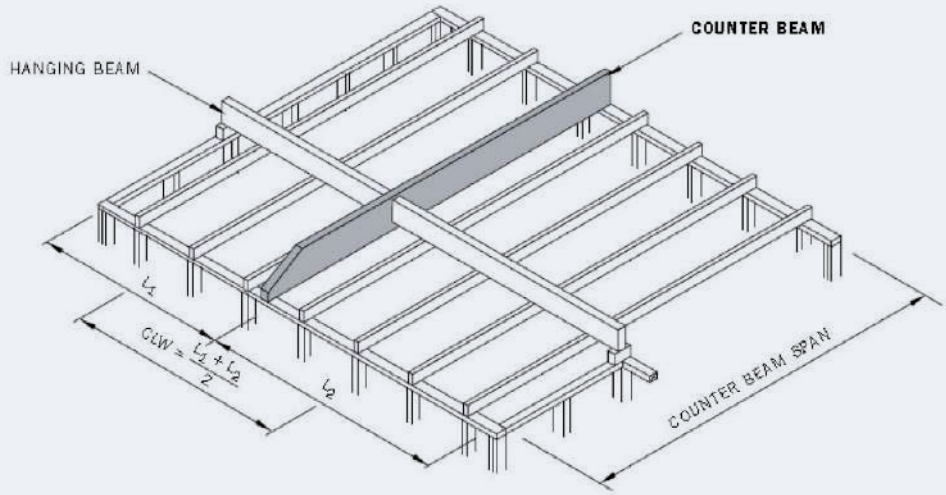


*Figure 5: Method for Calculating Ceiling Load Width for Counter Beams*

# 4

# Beam Components and Fabrication

### Flanges

Flange sizes in the following span tables utilise commonly available MGP and F-Grade seasoned softwood, seasoned hardwood and Laminated Veneer Lumber. Options include:

- MGP 10; 90 x 45 mm; JD 5
- MGP 12; 90 x 45 mm; JD 4
- F5; 90 x 45 mm; JD 5
- F17; 90 x 65 mm; JD 4
- Structural Grade LVL 10; 90 x 45mm; JD 5

A benefit of these timbers is that they are commonly available in all regions of Australia. The use of higher stress graded timber does not necessarily lead to higher beam spans as stress grade is not the governing feature of the beam design – nail holding between the web and flange is more important.

All timber used in conjunction with this span table should be stress graded in accordance with the relevant Australian Standards. Further to this, Structural Laminated Veneer Lumber (LVL) must be manufactured to AS/NZS 4357.0:2005 and in accordance with EWPAA branded structural LVL (see Figure 6 below). This ensures an engineered product of known and consistent physical and mechanical properties. Also note that that some chemical treatments may adversely affect structural properties and advice should be sought from the manufacturer prior to any treatment. The design properties of structural LVL as well as product dimensions are published by the individual manufacturers. In the span tables in this manual, LVL must attain a Modulus of Elasticity of 10 MPa. For further information on LVL go to www.paa.asn.au.

***Figure 6: Branding for LVL and plywood products***

### Plywood Webs

Plywood webs for box beams called up in the span tables are according to the following specification:

- Thickness: 7 mm minimum thick
- Structural grade: F8 (minimum)
- Grain direction: must run parallel to the beam span
- Face Grade: D/D minimum (i.e. structural non-aesthetic grade)
- Branding: EWPAA structurally tested

Plywood must be manufactured to AS/NZS 2269. This is the only plywood suitable for use in plywood box beam applications in these span tables. Under this scenario, a permanent Type A phenolic resin is used to bond the individual timber veneers. The Type A bond is distinctly dark in colour and is durable and permanent under conditions of stress.

EWPAA branded structural plywood is manufactured under a rigorous product quality control and product certification system and should be branded with the "PAA Tested" stamp (see Figure 6).

For the faces of plywood sheets, five face veneer qualities are possible including A, S, B, C and D. Structural plywood can be economically specified with appropriate face and back veneer qualities to suit the specific application. Where appearance is not important and the prime consideration is structural performance, D/D grade is most appropriate. For further information on plywood go to www.paa.asn.au.

### Web Stiffeners

Web stiffeners are made from the same material as flanges and are required to control buckling in plywood webs. Web stiffeners must be located at a maximum of 600 mm spacings and must be located at or in addition to positions of high load concentration to counter localised web buckling (e.g. at the ends of beams and under roof beam point loads). They must also be positioned to support plywood web butt joints.

### Nailing

Plywood webs are to be fastened to flanges and web stiffeners using:

- 2.87 mm minimum diameter flathead nails
- 32 mm long if ring shanked; 35 mm long it straight shanked
- Nails spaced 50 mm apart (maximum)
- Nailing at the edge of plywood sheets should been no closer than 5 nail diameters from the edge (e.g.15 mm for 2.87mm diameter nails).
- To avoid splitting in flange and web stiffeners, nails should be staggered 6 mm about the centre line of the flange (or web stiffener) as shown in Figure 7.

Note: The requirements of AS1720 have been varied with respect to recommend the nail spacings. Nail spacings have been reduced and staggered along the flange as detailed in Figure 7.

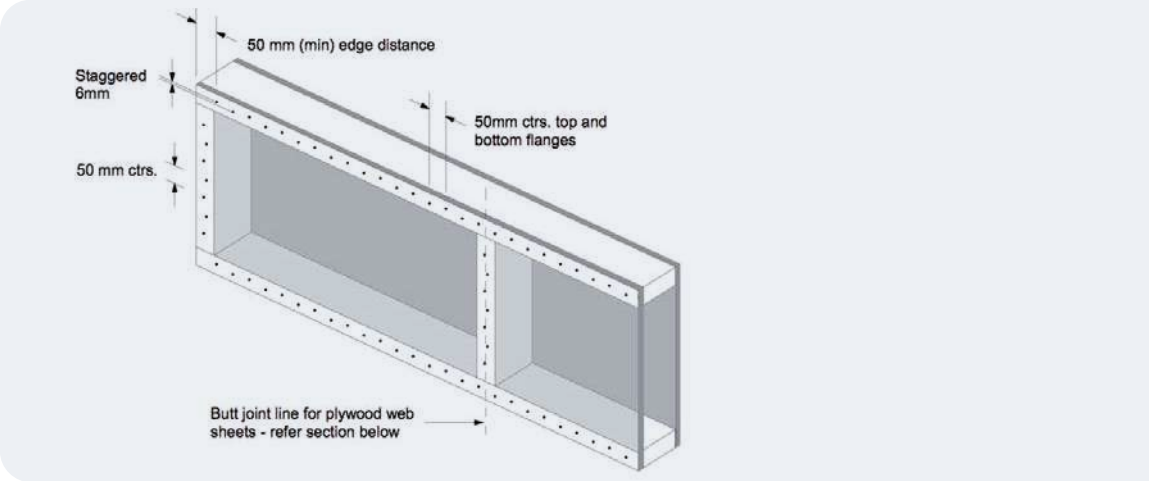


***Figure 7: Staggered nailing pattern for webs***

When specifying the type of nail to be used, the likelihood of corrosion should be considered. Hot dipped galvanised nail should be used in high humidity or mildly corrosive environments, or where treated plywood or timber is used. Stainless steel nails may be required in highly corrosive environments.

When fabricating flange and web stiffener framework, normal frame nailing techniques (in accordance with AS1684) may be used but care should be taken not to split the timber. Of note, this nailing is only required to assist fabrication of the framework as it is not structurally required once the plywood webs have been fixed i.e. using nailing requirements mentioned above.

### Adhesive

Adhesive helps provide a stiffer beam but due to the difficulty in reliably achieving full adhesive bond onsite, the beams in the span tables are based on nail holding/shear capacity. Even so, it is strongly recommended that an appropriate construction adhesive be used as an additional measure. Run a continuous bead of adhesive between the structural timber and plywood.

### Joints and Splices

Butt joints in plywood webs must be located on web stiffeners as shown in Figure 7. Joints must be alternated either side of the beam on alternative stiffeners. Here, webs must be nailed to stiffeners in the same manner as specified previously under “Nailing” but due to two sheets being joined over the same stiffener, care should be taken to angle nails towards the centre of the web stiffener to avoid splitting the edges of the stiffener.

Flange joints/splices should where practical be continuous length flanges which serves to avoid the need for splices. Where joints or splices are necessary, construct using timber splice plates as shown in Figure 8. Splices should be placed away from locations of high moment (e.g. away from the centre of simply supported beams) and where concentrated loads occur.

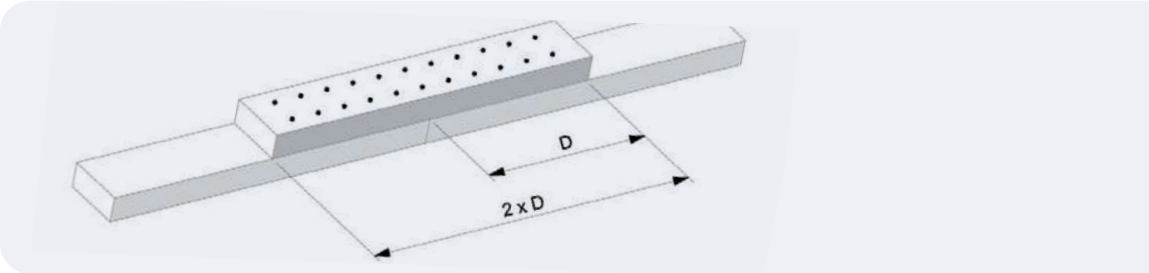


***Figure 8: Timber splice plate***

# 5 Installation

**Lintels**

Box beam lintels may be fabricated as separate units and then installed into a timber stud frame, or, lintels can be fabricated and installed as an integral part of a timber stud frame. In the latter, relevant parts of the wall frame must be constructed using flange and web stiffener sizes and spacings, taken from the span tables. The area is then sheathed as required on both sides with structural plywood, again taken from the span tables.

Where lintel box beams are built into the wall they must not include the top plate of the wall into the beam. Lintels assumptions require top plates in addition to the beam capacity and they also provide a function of continuity in the wall framing. Further construction requirements are shown in Figure 9 and Figure 10 below.

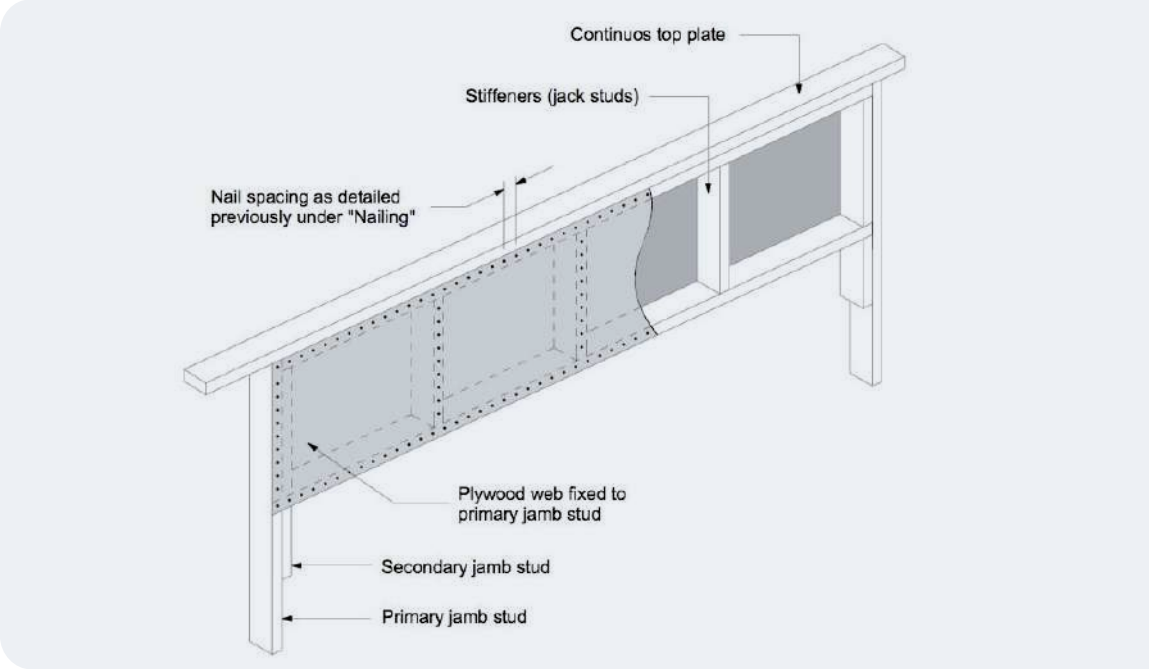


***Figure 9: Beams fabricated as part of the wall frame***

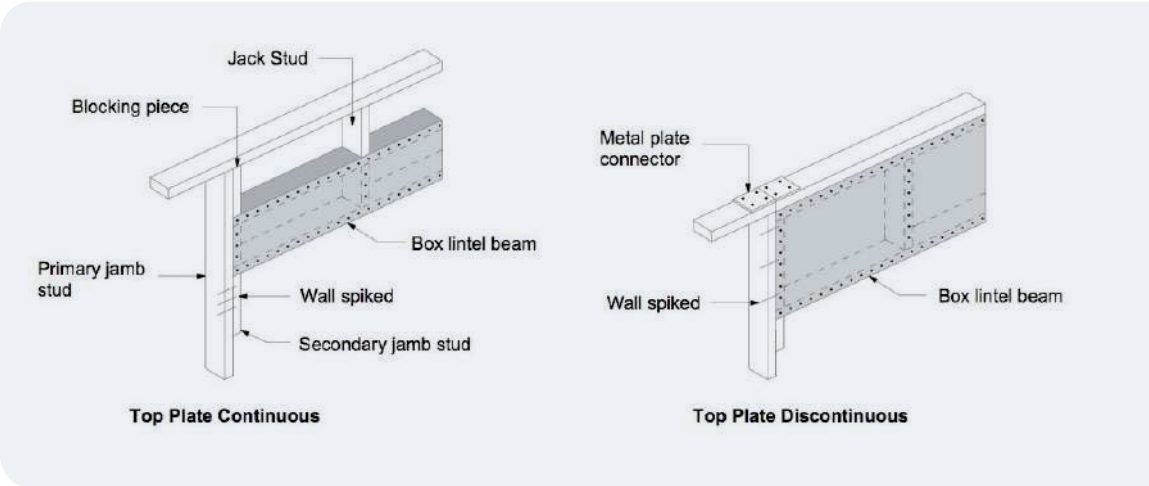


***Figure 10: Beams fabricated separately***

### Strutting and combined strutting hanging beams

Installation requirements for plywood box beam, strutting and hanging beams are as detailed in AS1684. Figure 11 provides additional fabrication and installation details where box beams require tapered ends – as required for certain roof types.

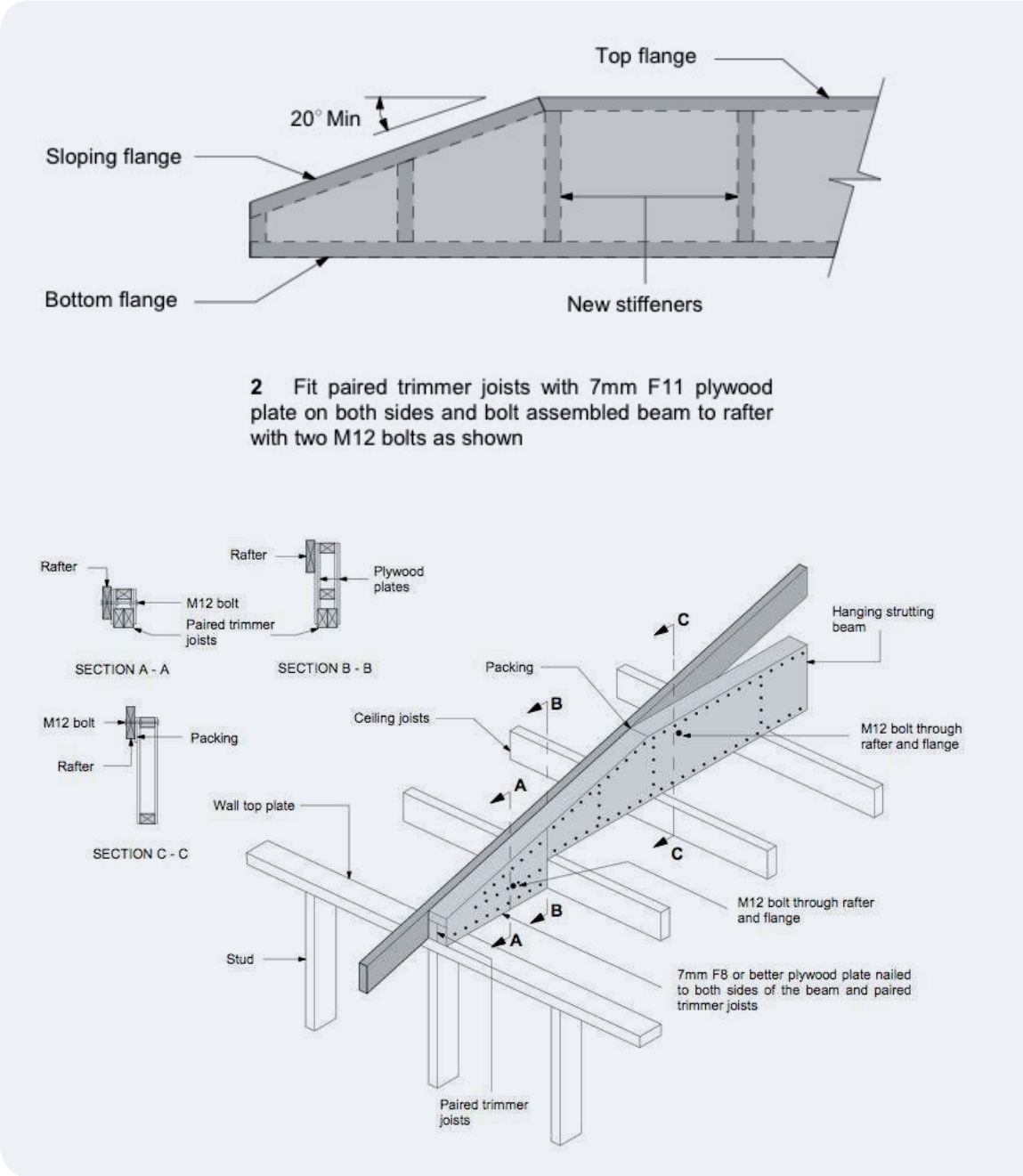


*Figure 11: Treatment of tapered ends in strutting and hanging beams*

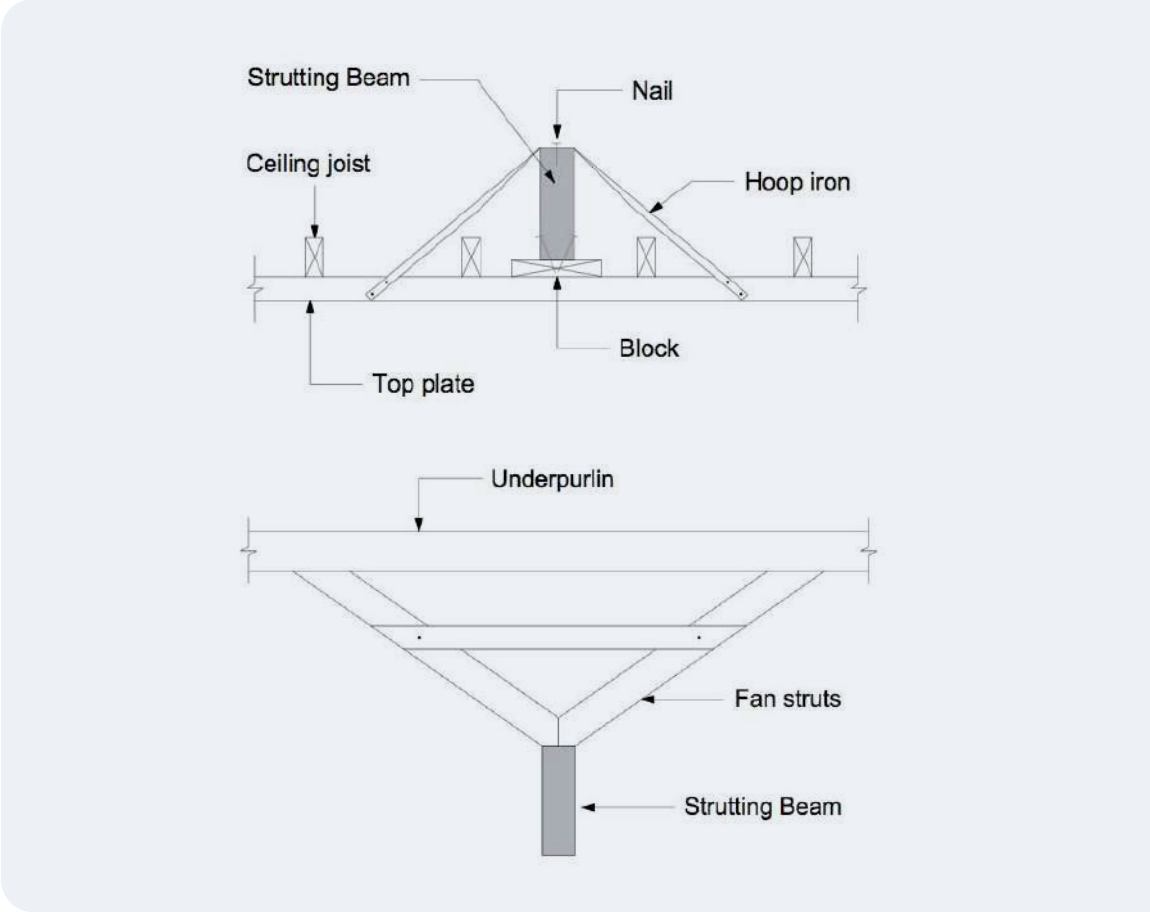


***Figure 12: Possible end and intermediate restraint details***

### Referenced Documents

The following Australian and New Zealand standards have been applied:

- AS/NZS 2269: 2004 Plywood structural
- AS 4055: 2006 Wind loads for housing
- AS1720.1: 1997 Timber structure- Part 1 Design Method
- AS 1684: 2006 Residential timber framed construction
- AS/NZS 4357.0: 2005 Structural Laminated Veneer Lumber

# 6 Span Tables

**JAMES MacGREGOR**
**Consultant to Engineering Timber Industry**

ABN 86 691 140 428

PO Box 115, Everton Park Q 4053
Email: jamesm@powerup.com.au
Phone (007) 3264 5568
0410 040 963

23rd May, 2011

To Whom it May Concern

**Plywood Box Beam Span Tables for Detached Housing Construction**

The writer and Mick McDowell RPEQ 2463 NPER 404540 agree to the following assumptions in the revision of the current FWPA 'Plywood Box Beam Span Tables for Detatched Housing Construction':

That the revision will be in accordance with the latest provisions of AS 1720.1 - 2010; AS/NZS 2269.0 - 2008; AS 4055 - 2006; AS 1684.1 - 1999; AS/NZS 1170.1 - 2002; and AS/NZS 1170.2 - 2011.

That the significant revisions are the changes to the material characteristic properties, the changes to the capacity factors (including the new above 25 square metres supported provisions) and the AS/NZS 1170.1 - 2002 changes in load factors used in AS 1684.1 - 1999.

The other assumptions used in this revision remain as for the present N3 wind class span tables.

Yours Faithfully

James MacGregor

Mick McDowall

# Span Tables - Lintel Beams

| Table 1: Ply Box Single Span Lintel Beam Single/Upper Storey | | | | | | | | | | | |
|---|---|---|---|---|---|---|---|---|---|---|---|
| Flanges: 90 x 45 mm, Ply webs: 7 mm F8, Wind Classification: N1, N2 & N3 | | | | | | | | | | | |
| Chord Stress Grade | Box Beam Depth (mm) | Lintels Single/Upper Storey Sheet Roof 600 mm Rafters Spacing | | | | | | | | | |
| | | Roof Load Width (mm) | | | | | | | | | |
| | | 2700 | 3000 | 3300 | 3600 | 3900 | 4200 | 4500 | 4800 | 5100 | 5400 |
| | | Maximum Beam Span (mm) | | | | | | | | | |
| F5 | 400 | 4300 | 4000 | 3900 | 3700 | 3600 | 3400 | 3300 | 3200 | 3100 | 2800 |
| F5 | 600 | 5500 | 5200 | 5000 | 4800 | 4600 | 4400 | 4300 | 4100 | 4000 | 3900 |
| F5 | 800 | 6500 | 6200 | 6000 | 5700 | 5500 | 5300 | 5100 | 5000 | 4800 | 4600 |
| F5 | 1200 | 7500 | 7200 | 6900 | 6600 | 6400 | 5900 | 5500 | 5300 | 5200 | 5100 |
| MGP 10 | 400 | 4300 | 4100 | 3900 | 3700 | 3600 | 3500 | 3300 | 3200 | 3100 | 2900 |
| MGP 10 | 600 | 5500 | 5300 | 5000 | 4800 | 4600 | 4400 | 4300 | 4100 | 4000 | 3900 |
| MGP 10 | 800 | 6600 | 6200 | 6000 | 5700 | 5500 | 5300 | 5100 | 5000 | 4800 | 4600 |
| MGP 10 | 1200 | 7500 | 7200 | 6900 | 6600 | 6400 | 5900 | 5500 | 5300 | 5100 | 5000 |
| LVL 10 | 400 | 4700 | 4500 | 4400 | 4200 | 4200 | 4100 | 4000 | 3900 | 3700 | 3600 |
| LVL 10 | 600 | 6100 | 5900 | 5700 | 5600 | 5400 | 5300 | 5100 | 5000 | 4900 | 4800 |
| LVL 10 | 800 | 7200 | 7000 | 6800 | 6600 | 6400 | 6300 | 6100 | 6000 | 5900 | 5800 |
| LVL 10 | 1200 | 8000 | 8000 | 8000 | 8000 | 8000 | 7900 | 7800 | 7600 | 7500 | 7300 |
| MGP 12 | 400 | 4900 | 4700 | 4500 | 4300 | 4200 | 4200 | 4100 | 4000 | 3900 | 3800 |
| MGP 12 | 600 | 6300 | 6100 | 5900 | 5700 | 5600 | 5400 | 5300 | 5100 | 4900 | 4600 |
| MGP 12 | 800 | 7500 | 7200 | 7000 | 6800 | 6400 | 5900 | 5500 | 5400 | 5200 | 5100 |
| MGP 12 | 1200 | 8000 | 8000 | 7500 | 7100 | 6800 | 6600 | 6400 | 6200 | 6100 | 5900 |
| F17 | 400 | 4900 | 4700 | 4500 | 4400 | 4200 | 4200 | 4100 | 4000 | 3900 | 3800 |
| F17 | 600 | 6400 | 6200 | 6000 | 5800 | 5600 | 5500 | 5300 | 5200 | 5100 | 4900 |
| F17 | 800 | 7500 | 7300 | 7100 | 6900 | 6700 | 6500 | 6400 | 6200 | 6100 | 6000 |
| F17 | 1200 | 8000 | 8000 | 8000 | 8000 | 8000 | 8000 | 8000 | 7900 | 7700 | 7600 |

**Notes**

i) Maximum spans are based on the support of a maximum sheet roof, framing and ceiling mass of 40 kg/m$^2$. For guidance on roof and ceiling mass refer to Appendix A of AS1684.2.

ii) Lintels to internal wall openings supporting ceiling joist only shall be sized as hanging beams.

iii) Lintels in gable or skillion end walls not supporting roof loads shall be determined as per Clause 6.3.6.3 of AS1684.2.

iv Minimum bearing length = 35 mm at end supports.

v) When lintels are used to their maximum design limits, deflections of up to 10 mm (deadload) or 15 mm (live load) may be expected.

vi) For Roof Load Width determination, refer to Figure 2.

# Span Tables - Lintel Beams

| Table 2: Ply Box Single Span Lintel Beam Single/Upper Storey | | | | | | | | | | | |
|---|---|---|---|---|---|---|---|---|---|---|---|
| Flanges: 90 x 45 mm, Ply webs: 7 mm F8, Wind Classification: N1, N2 & N3 | | | | | | | | | | | |
| Chord Stress Grade | Box Beam Depth (mm) | Lintels Single/Upper Storey Sheet Roof 1200 mm Rafters Spacing | | | | | | | | | |
| | | Roof Load Width (mm) | | | | | | | | | |
| | | 2700 | 3000 | 3300 | 3600 | 3900 | 4200 | 4500 | 4800 | 5100 | 5400 |
| | | Maximum Beam Span (mm) | | | | | | | | | |
| F5 | 400 | 4200 | 3900 | 3700 | 3500 | 3400 | 3300 | 3100 | 3000 | 3000 | 2900 |
| F5 | 600 | 5600 | 5300 | 5100 | 4900 | 4800 | 4400 | 4100 | 3800 | 3600 | 3500 |
| F5 | 800 | 6600 | 6200 | 5900 | 5600 | 5400 | 5300 | 5100 | 5000 | 4800 | 4600 |
| F5 | 1200 | 8000 | 8000 | 7500 | 6900 | 6400 | 6100 | 5900 | 5700 | 5500 | 5400 |
| MGP 10 | 400 | 4200 | 4000 | 3800 | 3600 | 3400 | 3300 | 3200 | 3100 | 3000 | 2300 |
| MGP 10 | 600 | 5600 | 5300 | 5100 | 4900 | 4800 | 4400 | 4100 | 3900 | 3600 | 3500 |
| MGP 10 | 800 | 6500 | 6200 | 5900 | 5600 | 5400 | 5200 | 5100 | 4900 | 4800 | 4600 |
| MGP 10 | 1200 | 8000 | 8000 | 7500 | 6900 | 6400 | 6000 | 5800 | 5600 | 5500 | 5300 |
| LVL 10 | 400 | 4700 | 4600 | 4400 | 4300 | 4100 | 3400 | 3300 | 3200 | 3000 | 2300 |
| LVL 10 | 600 | 6000 | 5800 | 5600 | 5500 | 5400 | 5200 | 5100 | 5000 | 4900 | 4500 |
| LVL 10 | 800 | 7200 | 6900 | 6700 | 6500 | 6300 | 6200 | 6000 | 5900 | 5800 | 5700 |
| LVL 10 | 1200 | 8000 | 8000 | 8000 | 8000 | 8000 | 7900 | 7800 | 7600 | 7400 | 7300 |
| MGP 12 | 400 | 4900 | 4700 | 4500 | 4400 | 4300 | 4200 | 4000 | 3800 | 3500 | 3400 |
| MGP 12 | 600 | 6200 | 6000 | 5800 | 5600 | 5500 | 5400 | 5100 | 4900 | 4700 | 4400 |
| MGP 12 | 800 | 7400 | 7200 | 6900 | 6700 | 6400 | 5900 | 5500 | 5200 | 5200 | 5000 |
| MGP 12 | 1200 | 8000 | 8000 | 8000 | 7900 | 7600 | 7300 | 7100 | 6900 | 6600 | 6400 |
| F17 | 400 | 4900 | 4700 | 4600 | 4400 | 4300 | 4200 | 4100 | 4000 | 3800 | 3700 |
| F17 | 600 | 6300 | 6100 | 5900 | 5700 | 5500 | 5400 | 5300 | 5200 | 4900 | 4600 |
| F17 | 800 | 7500 | 7300 | 7000 | 6800 | 6600 | 6400 | 6300 | 6100 | 6000 | 5900 |
| F17 | 1200 | 8000 | 8000 | 8000 | 8000 | 8000 | 8000 | 8000 | 7900 | 7700 | 7500 |

**Notes**

i) Lintels to internal walls supporting ceiling joist only shall be sized as hanging beams. Lintels in gable or skillions end walls not supporting roof loads shall be determined as per Clause 6.3.6.3 of AS1684.2. Remember minimum bearing length = 35 mm at end supports. When lintels are used to their maximum design limits, deflections of up to 10 mm(deadload) or 15 mm (live load) may be expected.

ii) For Roof Load Width determination, refer to Figure 2.

# Span Tables - Lintel Beams

| Table 3: Ply Box Single Span Lintel Beam Single/Upper Storey | | | | | | | | | | | |
|---|---|---|---|---|---|---|---|---|---|---|---|
| Flanges: 90 x 45 mm, Ply webs: 7 mm F8, Wind Classification: N1, N2 & N3 | | | | | | | | | | | |
| Chord Stress Grade | Box Beam Depth (mm) | Lintels Single/Upper Storey Tile Roof 600 mm Rafters Spacing | | | | | | | | | |
| | | Roof Load Width (mm) | | | | | | | | | |
| | | 2700 | 3000 | 3300 | 3600 | 3900 | 4200 | 4500 | 4800 | 5100 | 5400 |
| | | Maximum Beam Span (mm) | | | | | | | | | |
| F5 | 400 | 3600 | 3400 | 3200 | 2900 | 2800 | 2600 | 2500 | 2400 | 2300 | 2300 |
| F5 | 600 | 4400 | 4200 | 4200 | 4000 | 3800 | 3700 | 3600 | 3500 | 3400 | 3300 |
| F5 | 800 | 5300 | 5100 | 4900 | 4700 | 4600 | 4400 | 4300 | 4200 | 4000 | 3900 |
| F5 | 1200 | 6800 | 6600 | 6300 | 6200 | 6000 | 5800 | 5600 | 5400 | 5200 | 5100 |
| MGP 10 | 400 | 3600 | 3400 | 3000 | 3000 | 2800 | 2600 | 2400 | 2400 | 2400 | 2300 |
| MGP 10 | 600 | 4500 | 4400 | 4200 | 4000 | 3900 | 3700 | 3600 | 3500 | 3400 | 3300 |
| MGP 10 | 800 | 5500 | 5200 | 5000 | 4800 | 4600 | 4400 | 4300 | 4100 | 4000 | 3900 |
| MGP 10 | 1200 | 7000 | 6700 | 6400 | 6100 | 5900 | 5700 | 5500 | 5300 | 5200 | 5000 |
| LVL 10 | 400 | 3600 | 3400 | 3000 | 3000 | 2800 | 2600 | 2400 | 2400 | 2400 | 2400 |
| LVL 10 | 600 | 4500 | 4400 | 4200 | 4200 | 4000 | 3900 | 3800 | 3700 | 3600 | 3600 |
| LVL 10 | 800 | 5500 | 5300 | 5100 | 4900 | 4800 | 4600 | 4500 | 4300 | 4200 | 4200 |
| LVL 10 | 1200 | 7000 | 6800 | 6600 | 6400 | 6200 | 6000 | 5900 | 5700 | 5600 | 5400 |
| MGP 12 | 400 | 3600 | 3600 | 3500 | 3300 | 3000 | 3000 | 2800 | 2600 | 2500 | 2400 |
| MGP 12 | 600 | 4700 | 4500 | 4300 | 4200 | 4100 | 4000 | 3800 | 3700 | 3600 | 3600 |
| MGP 12 | 800 | 5700 | 5400 | 5200 | 5000 | 4800 | 4700 | 4500 | 4400 | 4300 | 4200 |
| MGP 12 | 1200 | 7200 | 6900 | 6700 | 6500 | 6300 | 6100 | 6000 | 5800 | 5700 | 5500 |
| F17 | 400 | 3600 | 3600 | 3500 | 3300 | 3100 | 3000 | 2800 | 2600 | 2500 | 2400 |
| F17 | 600 | 4700 | 4500 | 4300 | 4200 | 4100 | 4000 | 3900 | 3700 | 3600 | 3600 |
| F17 | 800 | 5700 | 5500 | 5300 | 5100 | 4900 | 4700 | 4600 | 4400 | 4300 | 4200 |
| F17 | 1200 | 7200 | 7000 | 6700 | 6500 | 6300 | 6000 | 5900 | 5700 | 5600 | 5400 |

**Notes**

i) Maximum spans are based on the support of a maximum total tile roof, framing and ceiling mass of 90 kg/m$^2$. For guidance on roof and ceiling mass refer to Appendix A, AS1684.2.

ii) Lintels to internal wall openings supporting ceiling joist only shall be sized as hanging beams. Lintels in gable or skillion end walls not supporting roof loads shall be determined as per Clause 6.3.6.3 of AS1684.2.

iii) Minimum bearing length = 35 mm at end supports.

v) When lintels are used to their maximum design limits, deflections of up to 10 mm (deadload) or 15 mm (live load) may be expected.

vi) For Roof Load Width determination, refer to Figure 2.

# Span Tables - Lintel Beams

| Table 4: Ply Box Single Span Lintel Beam Single/Upper Storey | | | | | | | | | | | |
|---|---|---|---|---|---|---|---|---|---|---|---|
| Flanges: 90 x 45 mm, Ply webs: 7 mm F8, Wind Classification: N1, N2 & N3 | | | | | | | | | | | |
| Chord Stress Grade | Box Beam Depth (mm) | Lintels Single/Upper Storey Tile Roof 1200 mm Rafters Spacing | | | | | | | | | |
| | | Roof Load Width (mm) | | | | | | | | | |
| | | 2700 | 3000 | 3300 | 3600 | 3900 | 4200 | 4500 | 4800 | 5100 | 5400 |
| | | Maximum Beam Span (mm) | | | | | | | | | |
| F5 | 400 | 3200 | 2200 | 2200 | 2100 | 2000 | 2000 | 1900 | 1800 | 1800 | 1800 |
| F5 | 600 | 4400 | 4300 | 4100 | 3900 | 3700 | 3500 | 3400 | 3200 | 3000 | 2900 |
| F5 | 800 | 5300 | 5100 | 4900 | 4800 | 4600 | 4400 | 4200 | 4100 | 3900 | 3800 |
| F5 | 1200 | 6700 | 6500 | 6200 | 6100 | 5900 | 5700 | 5500 | 5200 | 4900 | 4600 |
| MGP 10 | 400 | 3000 | 2200 | 2100 | 2000 | 1900 | 1900 | 1800 | 1800 | 1700 | 1600 |
| MGP 10 | 600 | 4600 | 4300 | 4100 | 3900 | 3700 | 3600 | 3400 | 3200 | 3100 | 2900 |
| MGP 10 | 800 | 5400 | 5200 | 5000 | 4800 | 4600 | 4400 | 4200 | 4000 | 3900 | 3800 |
| MGP 10 | 1200 | 7000 | 6700 | 6300 | 6100 | 5800 | 5600 | 5400 | 5200 | 4900 | 4600 |
| LVL 10 | 400 | 3000 | 2200 | 2100 | 2000 | 1900 | 1900 | 1800 | 1800 | 1700 | 1600 |
| LVL 10 | 600 | 4600 | 4400 | 4300 | 4100 | 4000 | 3800 | 3700 | 3600 | 3500 | 3400 |
| LVL 10 | 800 | 5500 | 5300 | 5100 | 4900 | 4800 | 4600 | 4500 | 4400 | 4300 | 4200 |
| LVL 10 | 1200 | 7000 | 6700 | 6400 | 6200 | 6100 | 5900 | 5700 | 5600 | 5500 | 5400 |
| MGP 12 | 400 | 3500 | 3200 | 3000 | 2300 | 2200 | 2100 | 2000 | 2000 | 1900 | 1900 |
| MGP 12 | 600 | 4700 | 4500 | 4300 | 4200 | 4100 | 3900 | 3800 | 3700 | 3500 | 3300 |
| MGP 12 | 800 | 5600 | 5400 | 5200 | 5000 | 4900 | 4700 | 4600 | 4500 | 4400 | 4300 |
| MGP 12 | 1200 | 7100 | 6800 | 6600 | 6400 | 6200 | 6000 | 5800 | 5700 | 5500 | 5400 |
| F17 | 400 | 3500 | 3400 | 3200 | 3100 | 3000 | 2800 | 2500 | 2300 | 2200 | 2100 |
| F17 | 600 | 4700 | 4500 | 4400 | 4200 | 4100 | 3900 | 3800 | 3700 | 3600 | 3500 |
| F17 | 800 | 5600 | 5400 | 5200 | 5100 | 4900 | 4800 | 4600 | 4500 | 4400 | 4300 |
| F17 | 1200 | 7200 | 6900 | 6600 | 6400 | 6200 | 6000 | 5900 | 5700 | 5600 | 5500 |

**Notes**

i) Maximum Lintel Spans are based on the support of a maximum total tile roof, framing and ceiling mass of 90 kg/m$^2$. For guidance on roof and ceiling mass refer to Appendix A of AS1684.2.

ii) Lintels to internal wall openings supporting ceiling joist only shall be sized as hanging beams.

iii) Lintels in gable or skillion end walls not supporting roof loads shall be determined as per Clause 6.3.6.3 of AS1684.2.

iv) Minimum bearing length = 35 mm at end supports.

v When lintels are used to their maximum design limits, deflections of up to 10 mm (deadload) or 15 mm (live load) may be expected.

vi) For Roof Load Width determination, refer to Figure 2.

# Span Tables - Lintel Beams

| Table 5: Ply Box Single Span Lintel Beam Single/Upper Storey + Conc Load | | | | | | | | | | | |
|---|---|---|---|---|---|---|---|---|---|---|---|
| Flanges: 90 x 45 mm, Ply webs: 7 mm F8, Wind Classification: N1, N2 & N3 | | | | | | | | | | | |
| Chord Stress Grade | Box Beam Depth (mm) | Lintels Single/Upper Storey Sheet Roof 600 mm Rafters | | | | | | | | | |
| | | Under Purlin or Hanging Beam | | | | | | | | | |
| | | 2400mm | | | | | 4200mm | | | | |
| | | Strutting Beam Span (mm) | | | | | | | | | |
| | | 3600 | 4200 | 4800 | 5400 | 6000 | 3600 | 4200 | 4800 | 5400 | 6000 |
| | | Maximum Beam Span (mm) | | | | | | | | | |
| F5 | 400 | 3200 | 2200 | 2200 | 2100 | 2000 | 2000 | 1900 | 1800 | 1800 | 1800 |
| F5 | 600 | 4400 | 4300 | 4100 | 3900 | 3700 | 3500 | 3400 | 3200 | 3000 | 2900 |
| F5 | 800 | 5300 | 5100 | 4900 | 4800 | 4600 | 4400 | 4200 | 4100 | 3900 | 3800 |
| F5 | 1200 | 6700 | 6500 | 6200 | 6100 | 5900 | 5700 | 5500 | 5200 | 4900 | 4600 |
| MGP 10 | 400 | 3000 | 2200 | 2100 | 2000 | 1900 | 1900 | 1800 | 1800 | 1700 | 1600 |
| MGP 10 | 600 | 4600 | 4300 | 4100 | 3900 | 3700 | 3600 | 3400 | 3200 | 3100 | 2900 |
| MGP 10 | 800 | 5400 | 5200 | 5000 | 4800 | 4600 | 4400 | 4200 | 4000 | 3900 | 3800 |
| MGP 10 | 1200 | 7000 | 6700 | 6300 | 6100 | 5800 | 5600 | 5400 | 5200 | 4900 | 4600 |
| LVL 10 | 400 | 3000 | 2200 | 2100 | 2000 | 1900 | 1900 | 1800 | 1800 | 1700 | 1600 |
| LVL 10 | 600 | 4600 | 4400 | 4300 | 4100 | 4000 | 3800 | 3700 | 3600 | 3500 | 3400 |
| LVL 10 | 800 | 5500 | 5300 | 5100 | 4900 | 4800 | 4600 | 4500 | 4400 | 4300 | 4200 |
| LVL 10 | 1200 | 7000 | 6700 | 6400 | 6200 | 6100 | 5900 | 5700 | 5600 | 5500 | 5400 |
| MGP 12 | 400 | 3500 | 3200 | 3000 | 2300 | 2200 | 2100 | 2000 | 2000 | 1900 | 1900 |
| MGP 12 | 600 | 4700 | 4500 | 4300 | 4200 | 4100 | 3900 | 3800 | 3700 | 3500 | 3300 |
| MGP 12 | 800 | 5600 | 5400 | 5200 | 5000 | 4900 | 4700 | 4600 | 4500 | 4400 | 4300 |
| MGP 12 | 1200 | 7100 | 6800 | 6600 | 6400 | 6200 | 6000 | 5800 | 5700 | 5500 | 5400 |
| F17 | 400 | 3500 | 3400 | 3200 | 3100 | 3000 | 2800 | 2500 | 2300 | 2200 | 2100 |
| F17 | 600 | 4700 | 4500 | 4400 | 4200 | 4100 | 3900 | 3800 | 3700 | 3600 | 3500 |
| F17 | 800 | 5600 | 5400 | 5200 | 5100 | 4900 | 4800 | 4600 | 4500 | 4400 | 4300 |
| F17 | 1200 | 7200 | 6900 | 6600 | 6400 | 6200 | 6000 | 5900 | 5700 | 5600 | 5500 |

**Notes**

i) Maximum Lintel Spans are based on the support of a maximum total sheet roof and ceiling framing mass of 40 kg/m$^2$ and tile roof, framing and ceiling mass of 90 kg/m$^2$. For guidance on roof and ceiling mass refer to Appendix A, AS1684. Lintels to internal wall openings supporting ceiling joist only shall be sized as hanging beams.

ii) Lintels in gable or skillion end walls not supporting roof loads shall be determined as per Clause 6.3.6.3.

iv) Minimum bearing length = 35 mm at end supports. Subscript values indicate the minimum and additional bearing length where required at end supports and internal supports.

v) When lintels are used to their maximum design limits, deflections of up to 10 mm (deadload) or 15 mm (live load) may be expected.

vi) For Roof Load Width determination, refer to Figure 2.

# Span Tables - Lintel Beams

| Table 6: Ply Box Single Span Lintel Beam Single/Upper Storey + Conc Load | | | | | | | | | | | |
|---|---|---|---|---|---|---|---|---|---|---|---|
| Flanges: 90 x 45 mm, Ply webs: 7 mm F8, Wind Classification: N1, N2 & N3 | | | | | | | | | | | |
| Chord Stress Grade | Box Beam Depth (mm) | Lintels Single/Upper Storey Sheet Roof 1200 mm Rafters | | | | | | | | | |
| | | Under Purlin or Hanging Beam | | | | | | | | | |
| | | 2400mm | | | | | 4200mm | | | | |
| | | Strutting Beam Span (mm) | | | | | | | | | |
| | | 3600 | 4200 | 4800 | 5400 | 6000 | 3600 | 4200 | 4800 | 5400 | 6000 |
| | | Maximum Beam Span (mm) | | | | | | | | | |
| F5 | 400 | 3800 | 3700 | 3500 | 3400 | 3300 | 3700 | 3400 | 2900 | 2400 | 2100 |
| F5 | 600 | 4500 | 4300 | 4200 | 4200 | 4100 | 4400 | 4300 | 4200 | 4100 | 3900 |
| F5 | 800 | 5000 | 4800 | 4700 | 4600 | 4400 | 5000 | 4800 | 4600 | 4500 | 4400 |
| F5 | 1200 | 5700 | 5600 | 5500 | 5400 | 5300 | 5800 | 5700 | 5600 | 5400 | 5300 |
| MGP 10 | 400 | 3800 | 3700 | 3600 | 3400 | 3100 | 3700 | 3000 | 2400 | 2100 | 1900 |
| MGP 10 | 600 | 4500 | 4300 | 4200 | 4200 | 4100 | 4400 | 4300 | 4200 | 4100 | 3900 |
| MGP 10 | 800 | 5000 | 4900 | 4700 | 4600 | 4500 | 5000 | 4800 | 4700 | 4500 | 4400 |
| MGP 10 | 1200 | 5700 | 5600 | 5600 | 5400 | 5300 | 5800 | 5700 | 5600 | 5400 | 5300 |
| LVL 10 | 400 | 3800 | 3700 | 3600 | 3400 | 3100 | 3700 | 3000 | 2400 | 2100 | 1900 |
| LVL 10 | 600 | 4500 | 4300 | 4200 | 4200 | 4100 | 4400 | 4300 | 4200 | 4100 | 4000 |
| LVL 10 | 800 | 5000 | 4900 | 4700 | 4600 | 4500 | 5000 | 4800 | 4700 | 4500 | 4400 |
| LVL 10 | 1200 | 5700 | 5600 | 5600 | 5400 | 5300 | 5800 | 5700 | 5600 | 5400 | 5300 |
| MGP 12 | 400 | 3900 | 3700 | 3600 | 3500 | 3400 | 3800 | 3600 | 3500 | 3000 | 2500 |
| MGP 12 | 600 | 4500 | 4300 | 4200 | 4200 | 4100 | 4400 | 4300 | 4200 | 4100 | 4000 |
| MGP 12 | 800 | 5000 | 4900 | 4700 | 4600 | 4500 | 5000 | 4800 | 4700 | 4500 | 4400 |
| MGP 12 | 1200 | 5700 | 5600 | 5600 | 5500 | 5300 | 5800 | 5700 | 5600 | 5400 | 5300 |
| F17 | 400 | 3900 | 3700 | 3600 | 3500 | 3400 | 3800 | 3600 | 3500 | 3300 | 3200 |
| F17 | 600 | 4500 | 4400 | 4200 | 4200 | 4100 | 4500 | 4300 | 4200 | 4200 | 4000 |
| F17 | 800 | 5000 | 4900 | 4700 | 4600 | 4500 | 5000 | 4800 | 4700 | 4500 | 4400 |
| F17 | 1200 | 5700 | 5600 | 5600 | 5500 | 5300 | 5800 | 5700 | 5600 | 5400 | 5300 |

**Notes**

i) Maximum Lintel Spans are based on the support of a maximum total sheet roof and ceiling framing mass of 40 kg/m$^2$ and tile roof, framing and ceiling mass of 90 kg/m$^2$. For guidance on roof and ceiling mass refer to Appendix A, AS1684.

ii) Lintels to internal wall openings supporting ceiling joist only shall be sized as hanging beams.

iii) Lintels in gable or skillion end walls not supporting roof loads shall be determined as per Clause 6.3.6.3.

iv) Minimum bearing length = 35 mm at end supports. Subscript values indicate the minimum and additional bearing length where required at end supports and internal supports.

v) When lintels are used to their maximum design limits, deflections of up to 10 mm (deadload) or 15 mm (live load) may be expected.

vi) For Roof Load Width determination, refer to Figure 2.

# Span Tables - Lintel Beams

| Table 7: Ply Box Single Span Lintel Beam Single/Upper Storey + Conc Load | | | | | | | | | | | |
|---|---|---|---|---|---|---|---|---|---|---|---|
| Flanges: 90 x 45 mm, Ply webs: 7 mm F8, Wind Classification: N1, N2 & N3 | | | | | | | | | | | |
| Chord Stress Grade | Box Beam Depth (mm) | Lintels Single/Upper Storey Tile Roof 600 mm Rafters | | | | | | | | | |
| | | Maximum Under Purlin or Hanging Beam Span (mm) | | | | | | | | | |
| | | 2400mm | | | | | 4200mm | | | | |
| | | Strutting Beam Span (mm) | | | | | | | | | |
| | | 3600 | 4200 | 4800 | 5400 | 6000 | 3600 | 4200 | 4800 | 5400 | 6000 |
| | | Maximum Beam Span (mm) | | | | | | | | | |
| F5 | 400 | 3600 | 3000 | 2700 | 2400 | 2200 | 2400 | 1900 | 1800 | 1500 | 1300 |
| F5 | 600 | 4900 | 4600 | 4300 | 4000 | 3800 | 4200 | 3900 | 3600 | 3300 | 2800 |
| F5 | 800 | 5800 | 5600 | 5400 | 5200 | 4900 | 5400 | 5000 | 4700 | 4300 | 4100 |
| F5 | 1200 | 7500 | 7300 | 7000 | 6800 | 6600 | 7100 | 6800 | 6500 | 6100 | 5700 |
| MGP 10 | 400 | 3200 | 2900 | 2400 | 2200 | 1900 | 2100 | 1800 | 1600 | 1300 | 1200 |
| MGP 10 | 600 | 5000 | 4600 | 4300 | 4100 | 3800 | 4200 | 3900 | 3300 | 2800 | 2400 |
| MGP 10 | 800 | 6100 | 5800 | 5500 | 5200 | 4900 | 5400 | 5000 | 4700 | 4300 | 4100 |
| MGP 10 | 1200 | 7900 | 7600 | 7200 | 6800 | 6500 | 7300 | 6800 | 6300 | 6000 | 5600 |
| LVL 10 | 400 | 3200 | 2900 | 2400 | 2200 | 1900 | 2100 | 1800 | 1600 | 1300 | 1200 |
| LVL 10 | 600 | 5100 | 4900 | 4700 | 4500 | 4000 | 4700 | 4000 | 3300 | 2800 | 2400 |
| LVL 10 | 800 | 6100 | 5900 | 5700 | 5500 | 5400 | 5700 | 5400 | 5300 | 5000 | 4600 |
| LVL 10 | 1200 | 7900 | 7600 | 7300 | 7100 | 6900 | 7400 | 7100 | 6800 | 6600 | 6400 |
| MGP 12 | 400 | 3600 | 3600 | 3000 | 2800 | 2400 | 2700 | 2400 | 1800 | 1800 | 1500 |
| MGP 12 | 600 | 5300 | 5100 | 4800 | 4600 | 4100 | 4800 | 4600 | 4000 | 3700 | 3200 |
| MGP 12 | 800 | 6300 | 6100 | 5800 | 5600 | 5400 | 5900 | 5600 | 5400 | 5200 | 4900 |
| MGP 12 | 1200 | 8000 | 7800 | 7500 | 7300 | 7100 | 7700 | 7300 | 7000 | 6800 | 6500 |
| F17 | 400 | 3700 | 3600 | 3600 | 3600 | 3200 | 3600 | 3000 | 2500 | 2300 | 1900 |
| F17 | 600 | 5400 | 5100 | 4900 | 4700 | 4100 | 4900 | 4600 | 4000 | 3800 | 3600 |
| F17 | 800 | 6400 | 6100 | 5900 | 5700 | 5500 | 6000 | 5700 | 5400 | 5200 | 5000 |
| F17 | 1200 | 8000 | 7900 | 7600 | 7300 | 7100 | 7700 | 7400 | 7100 | 6800 | 6600 |

**Notes**

i) For guidance on roof and ceiling mass refer to Appendix A, AS1684.

ii) Lintels to internal wall openings supporting ceiling joist only shall be sized as hanging beams.

iii) Lintels in gable or skillion end walls not supporting roof loads shall be determined as per Clause 6.3.6.3.

iv) When lintels are used to their maximum design limits, deflections of up to 10 mm (deadload) or 15 mm (live load) may be expected.

v) For Roof Load Width determination, refer to Figure 2.

# Span Tables - Lintel Beams

| Table 8: Ply Box Single Span Lintel Beam Single/Upper Storey + Conc Load | | | | | | | | | | | |
|---|---|---|---|---|---|---|---|---|---|---|---|
| Flanges: 90 x 45 mm, Ply webs: 7 mm F8, Wind Classification: N1, N2 & N3 | | | | | | | | | | | |
| Chord Stress Grade | Box Beam Depth (mm) | Lintels Single/Upper Storey Tile Roof 1200 mm Rafters Spacing | | | | | | | | | |
| | | Maximum Under Purlin or Hanging Beam Span (mm) | | | | | | | | | |
| | | 2400mm | | | | | 4200mm | | | | |
| | | Strutting Beam Span (mm) | | | | | | | | | |
| | | 3600 | 4200 | 4800 | 5400 | 6000 | 3600 | 4200 | 4800 | 5400 | 6000 |
| | | Maximum Beam Span (mm) | | | | | | | | | |
| F5 | 400 | 3000 | 2400 | 2100 | 1900 | 1700 | 1900 | 1600 | 1300 | 1200 | 1100 |
| F5 | 600 | 4500 | 4300 | 4200 | 4000 | 3700 | 4100 | 3800 | 3500 | 3200 | 3000 |
| F5 | 800 | 5000 | 4800 | 4700 | 4600 | 4400 | 5000 | 4800 | 4600 | 4200 | 3900 |
| F5 | 1200 | 5700 | 5600 | 5500 | 5400 | 5300 | 5800 | 5700 | 5600 | 5400 | 5300 |
| MGP 10 | 400 | 2600 | 2100 | 1900 | 1700 | 1500 | 1700 | 1400 | 1200 | 1100 | 1000 |
| MGP 10 | 600 | 4500 | 4300 | 4200 | 4000 | 3700 | 4200 | 3800 | 3500 | 3200 | 2900 |
| MGP 10 | 800 | 5000 | 4900 | 4700 | 4600 | 4500 | 5000 | 4800 | 4600 | 4200 | 3900 |
| MGP 10 | 1200 | 5700 | 5600 | 5600 | 5400 | 5300 | 5800 | 5700 | 5600 | 5400 | 5300 |
| LVL 10 | 400 | 2600 | 2100 | 1900 | 1700 | 1500 | 1700 | 1400 | 1200 | 1100 | 1000 |
| LVL 10 | 600 | 4500 | 4300 | 4200 | 4200 | 4100 | 4400 | 4300 | 3700 | 3300 | 2900 |
| LVL 10 | 800 | 5000 | 4900 | 4700 | 4600 | 4500 | 5000 | 4800 | 4700 | 4500 | 4400 |
| LVL 10 | 1200 | 5700 | 5600 | 5600 | 5400 | 5300 | 5800 | 5700 | 5600 | 5400 | 5300 |
| MGP 12 | 400 | 3500 | 3000 | 2500 | 2100 | 1900 | 2200 | 1800 | 1600 | 1400 | 1200 |
| MGP 12 | 600 | 4500 | 4300 | 4200 | 4200 | 4100 | 4400 | 4300 | 4200 | 4100 | 3600 |
| MGP 12 | 800 | 5000 | 4900 | 4700 | 4600 | 4500 | 5000 | 4800 | 4700 | 4500 | 4400 |
| MGP 12 | 1200 | 5700 | 5600 | 5600 | 5500 | 5300 | 5800 | 5700 | 5600 | 5400 | 5300 |
| F17 | 400 | 3900 | 3700 | 3400 | 3000 | 2600 | 3200 | 2500 | 2100 | 1800 | 1600 |
| F17 | 600 | 4500 | 4400 | 4200 | 4200 | 4100 | 4500 | 4300 | 4200 | 4200 | 3900 |
| F17 | 800 | 5000 | 4900 | 4700 | 4600 | 4500 | 5000 | 4800 | 4700 | 4500 | 4400 |
| F17 | 1200 | 5700 | 5600 | 5600 | 5500 | 5300 | 5800 | 5700 | 5600 | 5400 | 5300 |

**Notes**

i) For guidance on roof and ceiling mass refer to Appendix A, AS1684.

ii) Lintels to internal wall openings supporting ceiling joist only shall be sized as hanging beams.

iii) Lintels in gable or skillion end walls not supporting roof loads shall be determined as per Clause 6.3.6.3.

iv) When lintels are used to their maximum design limits, deflections of up to 10 mm (deadload) or 15 mm (live load) may be expected.

v) For Roof Load Width determination, refer to Figure 2.

# Span Tables - Strutting Beams

| Table 9: Ply Box Single Span Strutting Beam | | | | | | | | | | | |
|---|---|---|---|---|---|---|---|---|---|---|---|
| Flanges: 90 x 45 mm, Ply webs: 7 mm F8, Wind Classification: N1, N2 & N3 | | | | | | | | | | | |
| Chord Stress Grade | Box Beam Depth (mm) | Roof Load Area ($m^2$) | | | | | | | | | |
| | | 2.5 | 5 | 7.5 | 10 | 12.5 | 15 | 17.5 | 20 | 22.5 | 25 |
| | | Maximum Beam Span (mm) | | | | | | | | | |
| | | Sheet Roof | | | | | | | | | |
| F5 | 400 | 5200 | 2600 | 1700 | 1300 | 1000 | NA | NA | NA | NA | NA |
| F5 | 600 | 8000 | 4400 | 2900 | 2200 | 1700 | 1400 | 1200 | NA | NA | NA |
| F5 | 800 | 8000 | 6400 | 4200 | 3200 | 2500 | 2100 | 1800 | 1600 | 1400 | |
| F5 | 1200 | 8000 | 8000 | 7400 | 5600 | 4400 | 3700 | 3200 | 2800 | 2500 | 2200 |
| MGP 10 | 400 | 4800 | 2400 | 1600 | 1200 | NA | NA | NA | NA | NA | NA |
| MGP 10 | 600 | 8000 | 4000 | 2700 | 2000 | 1600 | 1300 | 1100 | NA | NA | NA |
| MGP 10 | 800 | 8000 | 5700 | 3800 | 2900 | 2300 | 1900 | 1600 | 1400 | 1300 | 0 |
| MGP 10 | 1200 | 8000 | 8000 | 6500 | 4900 | 3900 | 3200 | 2800 | 2400 | 2100 | 1900 |
| LVL 10 | 400 | 4800 | 2400 | 1600 | 1200 | NA | NA | NA | NA | NA | NA |
| LVL 10 | 600 | 8000 | 4000 | 2700 | 2000 | 1600 | 1300 | 1100 | NA | NA | NA |
| LVL 10 | 800 | 8000 | 5700 | 3800 | 2900 | 2300 | 1900 | 1600 | 1400 | 1300 | NA |
| LVL 10 | 1200 | 8000 | 8000 | 6500 | 4900 | 3900 | 3200 | 2800 | 2400 | 2100 | 1900 |
| MGP 12 | 400 | 5700 | 2800 | 1900 | 1400 | 1100 | NA | NA | NA | NA | NA |
| MGP 12 | 600 | 8000 | 4700 | 3100 | 2300 | 1800 | 1500 | 1300 | NA | NA | NA |
| MGP 12 | 800 | 8000 | 6600 | 4400 | 3300 | 2600 | 2200 | 1900 | 1600 | 1400 | NA |
| MGP 12 | 1200 | 8000 | 8000 | 7400 | 5500 | 4400 | 3700 | 3100 | 2800 | 2400 | 2200 |
| F17 | 400 | 6800 | 3400 | 2300 | 1700 | 1300 | NA | NA | NA | NA | NA |
| F17 | 600 | 8000 | 5500 | 3700 | 2800 | 2200 | 1800 | 1600 | NA | NA | NA |
| F17 | 800 | 8000 | 7900 | 5200 | 3900 | 3100 | 2600 | 2200 | 1900 | 1700 | 1600 |
| F17 | 1200 | 8000 | 8000 | 8000 | 6500 | 5200 | 4300 | 3700 | 3300 | 2900 | 2600 |

**Notes**

i) Maximum spans are based on the support of roof mass only up to a maximum sheet roof mass of 20 kg/$m^2$ and tiled roof mass of 60 kg/$m^2$. For guidance on roof and ceiling mass refer to Appendix A, AS1684.2. The mass of rafters and underpurlins is accommodated in the span calculations

ii) Where the depth to breadth ratio exceeds 3:1 G.I. strapping or similar restraint to the top edge of the beam is to be provided at the strutting points and at beam ends. Refer to Clause 7.2.26 of AS1684.2.

iii) Beam ends can not be chamfered.

iv) A minimum initial clearance of 25 mm shall be provided at the mid-span between the underside of the strutting beam and the tops of ceiling joist, ceiling lining or ceiling battens as appropriate.

v) Minimum bearing length = 70 mm at end supports.

vi) For design parameters reder to Figure 3.

vii) NA - Not applicable.

# Span Tables - Strutting Beams

| Table 10: Ply Box Single Span Strutting Beam | | | | | | | | | | | |
|---|---|---|---|---|---|---|---|---|---|---|---|
| Flanges: 90 x 45 mm, Ply webs: 7 mm F8, Wind Classification: N1, N2 & N3 | | | | | | | | | | | |
| Chord Stress Grade | Box Beam Depth (mm) | Roof Load Area ($m^2$) | | | | | | | | | |
| | | 2.5 | 5 | 7.5 | 10 | 12.5 | 15 | 17.5 | 20 | 22.5 | 25 |
| | | Maximum Beam Span (mm) | | | | | | | | | |
| | | Tile Roofs | | | | | | | | | |
| F5 | 400 | 3900 | 1900 | NA | NA | NA | NA | NA | NA | NA | NA |
| F5 | 600 | 6500 | 3200 | 2200 | 1600 | 1300 | NA | NA | NA | NA | NA |
| F5 | 800 | 8000 | 4800 | 3200 | 2400 | 1900 | 1600 | NA | NA | NA | NA |
| F5 | 1200 | 8000 | 8000 | 5500 | 4100 | 3300 | 2800 | 2400 | 2100 | 1800 | NA |
| MGP 10 | 400 | 3600 | 1800 | NA | NA | NA | NA | NA | NA | NA | NA |
| MGP 10 | 600 | 6000 | 3000 | 2000 | 1500 | NA | NA | NA | NA | NA | NA |
| MGP 10 | 800 | 8000 | 4300 | 2900 | 2100 | 1700 | 1400 | NA | NA | NA | NA |
| MGP 10 | 1200 | 8000 | 7300 | 4800 | 3600 | 2900 | 2400 | 2100 | 1800 | 1600 | NA |
| LVL 10 | 400 | 3600 | 1800 | NA | NA | NA | NA | NA | NA | NA | NA |
| LVL 10 | 600 | 6000 | 3000 | 2000 | 1500 | NA | NA | NA | NA | NA | NA |
| LVL 10 | 800 | 8000 | 4300 | 2900 | 2100 | 1700 | 1400 | 1200 | NA | NA | NA |
| LVL 10 | 1200 | 8000 | 7300 | 4800 | 3600 | 2900 | 2400 | 2100 | 1800 | 1600 | 1400 |
| MGP 12 | 400 | 4200 | 2100 | 1400 | NA | NA | NA | NA | NA | NA | NA |
| MGP 12 | 600 | 6900 | 3500 | 2300 | 1700 | 1400 | NA | NA | NA | NA | NA |
| MGP 12 | 800 | 8000 | 4900 | 3300 | 2500 | 2000 | 1600 | 1400 | NA | NA | NA |
| MGP 12 | 1200 | 8000 | 8000 | 5500 | 4100 | 3300 | 2700 | 2300 | 2000 | 1800 | 1600 |
| F17 | 400 | 5100 | 2500 | 1700 | 1200 | NA | NA | NA | NA | NA | NA |
| F17 | 600 | 8000 | 4100 | 2800 | 2100 | 1600 | NA | NA | NA | NA | NA |
| F17 | 800 | 8000 | 5900 | 3900 | 2900 | 2300 | 1900 | 1700 | NA | NA | NA |
| F17 | 1200 | 8000 | 8000 | 6500 | 4900 | 3900 | 3200 | 2800 | 2400 | 2100 | 1900 |

**Notes**

i) Maximum spans are based on the support of roof mass only up to a maximum sheet roof mass of 20 kg/$m^2$ and tiled roof mass of 60 kg/$m^2$. For guidance on roof and ceiling mass refer to Appendix A, AS1684.2. The mass of rafters and underpurlins is accommodated in the span calculations.

ii) Where the depth to breadth ratio exceeds 3:1 G.I. strapping or similar restraint to the top edge of the beam is to be provided at the strutting points and at beam ends. Refer to Clause 7.2.26 of AS1684.2.

iii) Beam ends can not be chamfered.

iv) A minimum initial clearance of 25 mm shall be provided at the mid-span between the underside of the strutting beam and the tops of ceiling joist, ceiling lining or ceiling battens as appropriate.

v) Minimum bearing length = 70 mm at end supports.

vi) For design parameters reder to Figure 3.

vii) NA - Not applicable.

# Span Tables - Strutting/Hanging Beams

| Table 11: Ply Box Single Span Strutting/Hanging Beam Perpendicular to Rafters - Sheet Roof | | | | | | | | | | |
|---|---|---|---|---|---|---|---|---|---|---|
| Chord Stress Grade | Box Beam Depth (mm) | Flanges: 90 x 45 mm, Ply webs: 7mm F8, Wind Class: N1, N2 & N3 | | | | | | | | |
| | | Roof Load Width (mm) | | | | | | | | |
| | | 1200 | 1800 | 2400 | 3000 | 3600 | 4200 | 4800 | 5400 | 6000 |
| | | Maximum Beam Span (mm) | | | | | | | | |
| F5 | 400 | 4500 | 3600 | 3200 | 2800 | 2600 | 2400 | 2200 | 2100 | 1900 |
| F5 | 600 | 5900 | 4800 | 4100 | 3700 | 3400 | 3100 | 2900 | 2700 | 2600 |
| F5 | 800 | 7100 | 5700 | 5000 | 4400 | 4000 | 3700 | 3500 | 3300 | 3100 |
| F5 | 1200 | 8000 | 7500 | 6500 | 5800 | 5300 | 4900 | 4500 | 4300 | 4100 |
| MGP 10 | 400 | 4500 | 3700 | 3200 | 2800 | 2600 | 2400 | 2200 | 2000 | 1800 |
| MGP 10 | 600 | 5900 | 4800 | 4100 | 3700 | 3400 | 3100 | 2900 | 2700 | 2600 |
| MGP 10 | 800 | 7000 | 5700 | 4900 | 4400 | 4000 | 3700 | 3500 | 3300 | 3100 |
| MGP 10 | 1200 | 8000 | 7400 | 6400 | 5700 | 5200 | 4800 | 4500 | 4200 | 4000 |
| LVL 10 | 400 | 7500 | 6100 | 4600 | 3700 | 3100 | 2600 | 2300 | 2000 | 1800 |
| LVL 10 | 600 | 8000 | 7900 | 6900 | 5800 | 4900 | 4200 | 3700 | 3300 | 2900 |
| LVL 10 | 800 | 8000 | 8000 | 8000 | 7300 | 6200 | 5300 | 4700 | 4100 | 3700 |
| LVL 10 | 1200 | 8000 | 8000 | 8000 | 8000 | 7900 | 6800 | 5900 | 5300 | 4700 |
| MGP 12 | 400 | 5600 | 4600 | 3900 | 3500 | 3200 | 2900 | 2500 | 2300 | 2000 |
| MGP 12 | 600 | 7300 | 5900 | 5100 | 4600 | 4200 | 3800 | 3500 | 3100 | 2800 |
| MGP 12 | 800 | 8000 | 7000 | 6100 | 5400 | 5000 | 4600 | 4300 | 4000 | 3600 |
| MGP 12 | 1200 | 8000 | 8000 | 7800 | 7000 | 6400 | 5900 | 5200 | 4600 | 4100 |
| F17 | 400 | 8000 | 6800 | 5300 | 4300 | 3600 | 3100 | 2700 | 2400 | 2200 |
| F17 | 600 | 8000 | 8000 | 7500 | 6000 | 5000 | 4300 | 3700 | 3300 | 3000 |
| F17 | 800 | 8000 | 8000 | 8000 | 7600 | 6400 | 5400 | 4800 | 4200 | 3800 |
| F17 | 1200 | 8000 | 8000 | 8000 | 8000 | 8000 | 6900 | 6100 | 5400 | 4900 |

**Notes**

i) Maximum spans are based on the support of a maximum sheet roof mass of 20 kg/m$^2$ plus a ceiling mass of 12 kg/m$^2$ (including ceiling joists) and a maximum tile roof mass of 60 kg/m$^2$ plus a ceiling mass of 12 kg/m$^2$. For guidance on roof and ceiling mass refer to Appendix A, AS1684.2. The mass of rafters, underpurlins and ceiling joists etc. is accommodated in the span calculations.

ii) Where the depth to breadth ration exceeds 3:1, G.I. strapping or similar restraint is to be provided to the top edge of the beam at beam ends. Refer to AS1684.2 Clause 7.2.26.

iii) Where hanging beams are not the same each side of the strutting/counter beam, the average of the spans may be used.

iv) Minimum bearing length = 70 mm at end supports. Subscript values indicate the minimum additional bearing length where required at end supports and internal supports.

v) For design parameters refer to Figure 3.

vi) RLW - Max of Roof Span/2 or Ceiling Joist Span/2 which ever is the greatest.

# Span Tables - Strutting/Hanging Beams

| Table 12: Ply Box Single Span Strutting/Hanging Beam Perpendicular to Rafters - Tile Roof | | | | | | | | | | |
|---|---|---|---|---|---|---|---|---|---|---|
| Chord Stress Grade | Box Beam Depth (mm) | Flanges: 90 x 45 mm, Ply webs: 7mm F8, Wind Class: N1, N2 & N3 | | | | | | | | |
| | | Roof Load Width (mm) | | | | | | | | |
| | | 1200 | 1800 | 2400 | 3000 | 3600 | 4200 | 4800 | 5400 | 6000 |
| | | Maximum Beam Span (mm) | | | | | | | | |
| F5 | 400 | 4600 | 3800 | 3200 | 2900 | 2600 | 2500 | 2300 | 2200 | 2000 |
| F5 | 600 | 6000 | 4900 | 4200 | 3800 | 3500 | 3200 | 3000 | 2800 | 2700 |
| F5 | 800 | 7300 | 5900 | 5100 | 4600 | 4200 | 3900 | 3600 | 3400 | 3200 |
| F5 | 1200 | 8000 | 7700 | 6700 | 5900 | 5400 | 5000 | 4700 | 4400 | 4100 |
| MGP 10 | 400 | 4700 | 3800 | 3300 | 2900 | 2700 | 2500 | 2300 | 2100 | 1900 |
| MGP 10 | 600 | 6100 | 4900 | 4300 | 3800 | 3500 | 3200 | 3000 | 2800 | 2700 |
| MGP 10 | 800 | 7300 | 5900 | 5100 | 4600 | 4200 | 3800 | 3600 | 3400 | 3200 |
| MGP 10 | 1200 | 8000 | 7600 | 6600 | 5900 | 5300 | 4900 | 4600 | 4400 | 4100 |
| LVL 10 | 400 | 7700 | 6300 | 4900 | 3900 | 3200 | 2800 | 2400 | 2100 | 1900 |
| LVL 10 | 600 | 8000 | 8000 | 7100 | 6200 | 5200 | 4400 | 3900 | 3500 | 3100 |
| LVL 10 | 800 | 8000 | 8000 | 8000 | 7500 | 6600 | 5600 | 4900 | 4400 | 4000 |
| LVL 10 | 1200 | 8000 | 8000 | 8000 | 8000 | 8000 | 7200 | 6300 | 5600 | 5000 |
| MGP 12 | 400 | 5800 | 4700 | 4100 | 3600 | 3300 | 3100 | 2700 | 2400 | 2200 |
| MGP 12 | 600 | 7500 | 6100 | 5300 | 4700 | 4300 | 4000 | 3700 | 3300 | 3000 |
| MGP 12 | 800 | 8000 | 7300 | 6300 | 5600 | 5100 | 4700 | 4400 | 4200 | 3800 |
| MGP 12 | 1200 | 8000 | 8000 | 8000 | 7200 | 6500 | 5900 | 5000 | 4700 | 4200 |
| F17 | 400 | 8000 | 7000 | 5700 | 4500 | 3800 | 3200 | 2800 | 2500 | 2300 |
| F17 | 600 | 8000 | 8000 | 7800 | 6300 | 5300 | 4500 | 4000 | 3500 | 3200 |
| F17 | 800 | 8000 | 8000 | 8000 | 8000 | 6700 | 5800 | 5100 | 4500 | 4100 |
| F17 | 1200 | 8000 | 8000 | 8000 | 8000 | 8000 | 7400 | 6500 | 5700 | 5200 |

**Notes**

i) Maximum spans are based on the support of a maximum sheet roof mass of 20 kg/m$^2$ plus a ceiling mass of 12 kg/m$^2$ (including ceiling joists) and a maximum tile roof mass of 60 kg/m$^2$ plus a ceiling mass of 12 kg/m$^2$.

ii) For guidance on roof and ceiling mass refer to Appendix A, AS1684.2. The mass of rafters, underpurlins and ceiling joists etc. is accommodated in the span calculations.

iii) Where the depth to breadth ration exceeds 3:1, G.I. strapping or similar restraint is to be provided to the top edge of the beam at beam ends. Refer to AS1684.2 Clause 7.2.26.

iv) Where hanging beams are not the same each side of the strutting/counter beam, the average of the spans may be used.

v) Minimum bearing length = 70 mm at end supports. Subscript values indicate the minimum additional bearing length where required at end supports and internal supports.

vi) For other design parameters refer to Figure 3.

vii) RLW = Max of Roof Span/2 or Ceiling Joist Span/2 which ever is the greatest.

# Span Tables - Bearers

| Table 13: Ply Box Single Span Bearers Supporting Floor Load Only | | | | | | | | | | |
|---|---|---|---|---|---|---|---|---|---|---|
| Chord Stress Grade | Box Beam Depth (mm) | Flanges: 90 x 45 mm, Ply webs: 7mm F8, Wind Class: N1, N2 & N3 | | | | | | | | |
| | | Floor Load Width (mm) | | | | | | | | |
| | | 3000 | 3300 | 3600 | 3900 | 4200 | 4500 | 4800 | 5100 | 5400 |
| | | Maximum Beam Span (mm) | | | | | | | | |
| F5 | 400 | 2700 | 2400 | 2200 | 1800 | 1400 | NA | NA | NA | NA |
| F5 | 600 | 4200 | 4000 | 3700 | 3400 | 3100 | 2900 | 2700 | 2500 | 2300 |
| F5 | 800 | 5000 | 4800 | 4600 | 4400 | 4200 | 4100 | 3900 | 3700 | 3400 |
| F5 | 1200 | 6500 | 6200 | 5900 | 5700 | 5500 | 5300 | 5100 | 4900 | 4600 |
| MGP 10 | 400 | 2500 | 2200 | 1900 | 1400 | 1100 | NA | NA | NA | NA |
| MGP 10 | 600 | 4100 | 3700 | 3400 | 3100 | 2900 | 2600 | 2500 | 2300 | 2200 |
| MGP 10 | 800 | 5000 | 4800 | 4600 | 4400 | 4100 | 3800 | 3500 | 3300 | 3100 |
| MGP 10 | 1200 | 6500 | 6100 | 5900 | 5600 | 5400 | 5200 | 5000 | 4900 | 4600 |
| LVL 10 | 400 | 2500 | 2200 | 1900 | 1400 | 1100 | NA | NA | NA | NA |
| LVL 10 | 600 | 4100 | 3700 | 3400 | 3100 | 2900 | 2600 | 2500 | 2300 | 2200 |
| LVL 10 | 800 | 5700 | 5300 | 4800 | 4400 | 4100 | 3800 | 3500 | 3300 | 3100 |
| LVL 10 | 1200 | 7300 | 7100 | 6800 | 6600 | 6400 | 6300 | 5900 | 5500 | 4600 |
| MGP 12 | 400 | 2900 | 2600 | 2400 | 2200 | 1900 | 1500 | 1200 | NA | NA |
| MGP 12 | 600 | 4800 | 4300 | 3900 | 3600 | 3300 | 3100 | 2900 | 2700 | 2500 |
| MGP 12 | 800 | 5900 | 5700 | 5500 | 5100 | 4700 | 4400 | 4100 | 3800 | 3600 |
| MGP 12 | 1200 | 7500 | 7200 | 7000 | 6800 | 6600 | 6100 | 5700 | 5300 | 4600 |
| F17 | 400 | 3500 | 3100 | 2900 | 2600 | 2400 | 2200 | 2100 | 1700 | 1400 |
| F17 | 600 | 4900 | 4700 | 4600 | 4300 | 4000 | 3700 | 3400 | 3200 | 3000 |
| F17 | 800 | 5900 | 5700 | 5500 | 5300 | 5100 | 4700 | 4400 | 4100 | 3900 |
| F17 | 1200 | 7600 | 7300 | 7000 | 6800 | 6600 | 6400 | 6000 | 5600 | 4700 |

**Notes**

i) Maximum Bearer Spans are based on the support of a maximum flooring mass of 40 kg/m$^2$.

ii) Minimum bearing length = 50 mm at end supports.

iii) For design parameters refer to Figure 4.7.

iv) For Floor Load Width refer to Figure 4

v) NA - Not applicable

# Span Tables - Bearers

| Table 14: Ply Box Single Span Floor Bearers - Floor load width 3600 mm | | | | | | | | | |
|---|---|---|---|---|---|---|---|---|---|
| Supporting single or upper storey loadbearing walls | | | | | | | | | |
| Flanges: 90 x 45 mm, Ply webs: 7mm F8, Wind Class: N1, N2 & N3 | | | | | | | | | |
| Chord Stress Grade | Box Beam Depth (mm) | Floor Load Width (mm) | | | | | | | |
| | | 3000 | 4200 | 5400 | 6600 | 3000 | 4200 | 5400 | 6600 |
| | | Maximum Beam Span (mm) | | | | | | | |
| | | Sheet Roof | | | | Tile Roof | | | |
| F5 | 400 | 1200 | 1100 | 1100 | 1000 | 1000 | NA | NA | NA |
| F5 | 600 | 1900 | 1800 | 1700 | 1600 | 1600 | 1400 | 1300 | 1200 |
| F5 | 800 | 2600 | 2400 | 2300 | 2200 | 2200 | 2000 | 1800 | 1600 |
| F5 | 1200 | 3800 | 3600 | 3500 | 3300 | 3300 | 3000 | 2700 | 2500 |
| MGP 10 | 400 | 1100 | 1100 | 1000 | 1000 | NA | NA | NA | NA |
| MGP 10 | 600 | 1900 | 1800 | 1700 | 1600 | 1600 | 1400 | 1300 | 1200 |
| MGP 10 | 800 | 2600 | 2500 | 2400 | 2300 | 2300 | 2000 | 1900 | 1700 |
| MGP 10 | 1200 | 4000 | 3800 | 3600 | 3400 | 3400 | 3100 | 2800 | 2600 |
| LVL 10 | 400 | 1100 | 1100 | 1000 | NA | NA | NA | NA | NA |
| LVL 10 | 600 | 1900 | 1800 | 1700 | 1600 | 1600 | 1400 | 1300 | 1200 |
| LVL 10 | 800 | 2700 | 2600 | 2400 | 2300 | 2300 | 2100 | 1900 | 1700 |
| LVL 10 | 1200 | 4300 | 4000 | 3900 | 3700 | 3600 | 3300 | 3000 | 2800 |
| MGP 12 | 400 | 1300 | 1200 | 1100 | 1100 | 1100 | 1000 | NA | NA |
| MGP 12 | 600 | 2000 | 1900 | 1800 | 1700 | 1700 | 1500 | 1400 | 1300 |
| MGP 12 | 800 | 2700 | 2600 | 2400 | 2300 | 2300 | 2100 | 1900 | 1700 |
| MGP 12 | 1200 | 4100 | 3900 | 3700 | 3500 | 3500 | 3200 | 2900 | 2700 |
| F17 | 400 | 1400 | 1300 | 1200 | 1200 | 1200 | 1100 | 1000 | NA |
| F17 | 600 | 2200 | 2000 | 1900 | 1800 | 1800 | 1700 | 1500 | 1400 |
| F17 | 800 | 2900 | 2800 | 2600 | 2500 | 2500 | 2200 | 2100 | 1900 |
| F17 | 1200 | 4400 | 4200 | 4000 | 3800 | 3800 | 3400 | 3100 | 2900 |

**Notes**

i) Maximum Bearer Spans supporting roof loads are based on the support of a maximum total sheet roof, framing and ceiling mass of 40 kg/m$^2$, a maximum total tile roof, framing and ceiling mass of 90 kg/m$^2$ and a maximum floor mass of 40 kg/m$^2$. For guidance on determination of roof mass refer to Appendix A, AS1684.2

ii) Minimum bearing length = 50 mm at end supports.

iii) For design parameters refer to Figure 4.6 AS1684.2.

iv) Bearers cannot support walls at right angles to bearer.

v) Table does not cover where bearers support roof point loads.

vi) NA - Not applicable

# Span Tables - Bearers

| Table 15: Ply Box Single Span Floor Bearers - Floor load width 4200 mm | | | | | | | | | |
|---|---|---|---|---|---|---|---|---|---|
| Supporting single or upper storey loadbearing walls | | | | | | | | | |
| Flanges: 90 x 45 mm, Ply webs: 7mm F8, Wind Class: N1, N2 & N3 | | | | | | | | | |
| Chord Stress Grade | Box Beam Depth (mm) | Roof Load Width (mm) | | | | | | | |
| | | 3000 | 4200 | 5400 | 6600 | 3000 | 4200 | 5400 | 6600 |
| | | Maximum Beam Span (mm) | | | | | | | |
| | | Sheet Roof | | | | Tile Roof | | | |
| F5 | 400 | NA | NA | NA | NA | NA | NA | NA | NA |
| F5 | 600 | 1500 | 1500 | 1400 | 1300 | 1300 | 1200 | 1100 | 1000 |
| F5 | 800 | 2100 | 2000 | 1900 | 1900 | 1800 | 1700 | 1500 | 1400 |
| F5 | 1200 | 3300 | 3100 | 3000 | 2800 | 2800 | 2600 | 2400 | 2200 |
| MGP 10 | 400 | 1000 | NA | NA | NA | NA | NA | NA | NA |
| MGP 10 | 600 | 1600 | 1500 | 1400 | 1400 | 1400 | 1300 | 1200 | 1100 |
| MGP 10 | 800 | 2200 | 2100 | 2000 | 1900 | 1900 | 1700 | 1600 | 1500 |
| MGP 10 | 1200 | 3400 | 3200 | 3100 | 3000 | 2900 | 2700 | 2500 | 2300 |
| LVL 10 | 400 | 1000 | NA | NA | NA | NA | NA | NA | NA |
| LVL 10 | 600 | 1600 | 1600 | 1500 | 1400 | 1400 | 1300 | 1200 | 1100 |
| LVL 10 | 800 | 2400 | 2300 | 2100 | 2000 | 2100 | 1900 | 1700 | 1600 |
| LVL 10 | 1200 | 3600 | 3500 | 3300 | 3200 | 3200 | 2900 | 2700 | 2500 |
| MGP 12 | 400 | 1000 | NA | NA | NA | NA | NA | NA | NA |
| MGP 12 | 600 | 1600 | 1500 | 1500 | 1400 | 1400 | 1300 | 1200 | 1100 |
| MGP 12 | 800 | 2300 | 2100 | 2100 | 2000 | 2000 | 1800 | 1600 | 1500 |
| MGP 12 | 1200 | 3500 | 3300 | 3200 | 3000 | 3000 | 2800 | 2500 | 2400 |
| F17 | 400 | 1100 | 1000 | 1000 | NA | NA | NA | NA | NA |
| F17 | 600 | 1800 | 1700 | 1600 | 1500 | 1500 | 1400 | 1300 | 1200 |
| F17 | 800 | 2400 | 2300 | 2200 | 2100 | 2100 | 1900 | 1800 | 1600 |
| F17 | 1200 | 3700 | 3600 | 3400 | 3300 | 3300 | 3000 | 2700 | 2500 |

**Notes**

i) Maximum Bearer Spans supporting roof loads are based on the support of a maximum total sheet roof, framing and ceiling mass of 40 kg/m$^2$, a maximum total tile roof, framing and ceiling mass of 90 kg/m$^2$ and a maximum floor mass of 40 kg/m$^2$. For guidance on determination of roof mass refer to Appendix A, AS1684.2.
ii) Minimum bearing length = 50 mm at end supports.
iii) For design parameters refer to Figure 4.6 AS1684.2.
iv) Bearers cannot support walls at right angles to bearer.
v) Table does not cover where bearers support roof point loads.
vi) NA - Not applicable

# Span Tables - Bearers

| Table 16: Ply Box Single Span Floor Bearers - Floor load width 5400 mm | | | | | | | | | |
|---|---|---|---|---|---|---|---|---|---|
| Supporting single or upper storey loadbearing walls | | | | | | | | | |
| Flanges: 90 x 45 mm, Ply webs: 7mm F8, Wind Class: N1, N2 & N3 | | | | | | | | | |
| Chord Stress Grade | Box Beam Depth (mm) | Roof Load Width (mm) | | | | | | | |
| | | 3000 | 4200 | 5400 | 6600 | 3000 | 4200 | 5400 | 6600 |
| | | Maximum Beam Span (mm) | | | | | | | |
| | | Sheet Roof | | | | Tile Roof | | | |
| F5 | 400 | NA | NA | NA | NA | NA | NA | NA | NA |
| F5 | 600 | 1000 | 1000 | NA | NA | NA | NA | NA | NA |
| F5 | 800 | 1500 | 1400 | 1200 | 1100 | 1300 | 1200 | 1200 | 1100 |
| F5 | 1200 | 2400 | 2300 | 1900 | 1800 | 2200 | 2000 | 1900 | 1700 |
| MGP 10 | 400 | NA | NA | NA | NA | NA | NA | NA | NA |
| MGP 10 | 600 | 1100 | 1000 | 1000 | 1000 | 1000 | NA | NA | NA |
| MGP 10 | 800 | 1600 | 1500 | 1500 | 1400 | 1400 | 1300 | 1200 | 1100 |
| MGP 10 | 1200 | 2500 | 2400 | 2300 | 2300 | 2200 | 2100 | 1900 | 1800 |
| LVL 10 | 400 | NA | NA | NA | NA | NA | NA | NA | NA |
| LVL 10 | 600 | 1200 | 1100 | 1000 | NA | 1100 | 1000 | NA | NA |
| LVL 10 | 800 | 1700 | 1600 | 1500 | NA | 1400 | 1400 | 1300 | 1200 |
| LVL 10 | 1200 | 2700 | 2600 | 2400 | 2400 | 2400 | 2200 | 2100 | 2000 |
| MGP 12 | 400 | NA | NA | NA | NA | NA | NA | NA | NA |
| MGP 12 | 600 | 1100 | 1100 | 1000 | 1000 | 1000 | NA | NA | NA |
| MGP 12 | 800 | 1600 | 1500 | 1500 | 1400 | 1400 | 1300 | 1200 | 1200 |
| MGP 12 | 1200 | 2600 | 2500 | 2400 | 2300 | 2300 | 2100 | 2000 | 1900 |
| F17 | 400 | NA | NA | NA | NA | NA | NA | NA | NA |
| F17 | 600 | 1100 | 1100 | NA | NA | 1000 | NA | NA | NA |
| F17 | 800 | 1600 | 1600 | 1200 | 1200 | 1400 | 1300 | 1200 | 1200 |
| F17 | 1200 | 2600 | 2500 | 2100 | 2000 | 2300 | 2200 | 2000 | 1900 |

**Notes**

i) Maximum Bearer Spans supporting roof loads are based on the support of a maximum total sheet roof, framing and ceiling mass of 40 kg/m$^2$, a maximum total tile roof, framing and ceiling mass of 90 kg/m$^2$ and a maximum floor mass of 40 kg/m$^2$. For guidance on determination of roof mass refer to Appendix A, AS1684.2.
ii) Minimum bearing length = 50 mm at end supports.
iii) For design parameters refer to Figure 4.6 AS1684.2.
iv) Bearers cannot support walls at right angles to bearer.
v) Table does not cover where bearers support roof point loads.
vi) NA - Not applicable

# Span Tables - Counter Beams

| Table 17: Ply Box Single Span Counter Beam | | | | | | | | | |
|---|---|---|---|---|---|---|---|---|---|
| Chord Stress Grade | Box Beam Depth (mm) | Flanges: 90 x 45 mm, Ply webs: 7mm F8, Wind Classification: N1, N2 & N3 | | | | | | | |
| | | Ceiling Load Width | | | | | | | |
| | | 2400 | 3000 | 3600 | 4200 | 4800 | 5400 | 6000 | 5600 |
| | | Maximum Beam Span (mm) | | | | | | | |
| F5 | 400 | 3900 | 3500 | 3200 | 2900 | 2700 | 2600 | 2400 | 2300 |
| F5 | 600 | 5100 | 4500 | 4100 | 3800 | 3600 | 3400 | 3200 | 3000 |
| F5 | 800 | 6100 | 5500 | 5000 | 4600 | 4300 | 4100 | 3900 | 3700 |
| F5 | 1200 | 8000 | 7200 | 6600 | 6100 | 5700 | 5400 | 5100 | 4400 |
| MGP 10 | 400 | 3700 | 3400 | 3100 | 2800 | 2700 | 2500 | 2400 | 2300 |
| MGP 10 | 600 | 4800 | 4300 | 4000 | 3700 | 3400 | 3200 | 3100 | 2900 |
| MGP 10 | 800 | 5800 | 5200 | 4700 | 4400 | 4100 | 3900 | 3700 | 3500 |
| MGP 10 | 1200 | 7600 | 6800 | 6200 | 5700 | 5400 | 5000 | 4800 | 4300 |
| LVL 10 | 400 | 3700 | 3400 | 3100 | 2800 | 2700 | 2500 | 2400 | 2300 |
| LVL 10 | 600 | 4800 | 4300 | 4000 | 3700 | 3400 | 3200 | 3100 | 2900 |
| LVL 10 | 800 | 5800 | 5200 | 4700 | 4400 | 4100 | 3900 | 3700 | 3500 |
| LVL 10 | 1200 | 7600 | 6800 | 6200 | 5700 | 5400 | 5000 | 4800 | 4400 |
| MGP 12 | 400 | 4100 | 3700 | 3300 | 3100 | 2900 | 2700 | 2600 | 2400 |
| MGP 12 | 600 | 5200 | 4700 | 4300 | 3900 | 3700 | 3500 | 3300 | 3100 |
| MGP 12 | 800 | 6200 | 5600 | 5100 | 4700 | 4400 | 4200 | 3900 | 3600 |
| MGP 12 | 1200 | 8000 | 7200 | 6600 | 6100 | 5700 | 5400 | 5100 | 4700 |
| F17 | 400 | 4500 | 4000 | 3600 | 3400 | 3200 | 3000 | 2800 | 2700 |
| F17 | 600 | 5700 | 5100 | 4700 | 4300 | 4000 | 3800 | 3600 | 3400 |
| F17 | 800 | 6800 | 6100 | 5600 | 5100 | 4800 | 4500 | 4300 | 4000 |
| F17 | 1200 | 8000 | 7800 | 7200 | 6600 | 6200 | 5800 | 5500 | 5100 |

**Notes**

i) Maximum spans are based on the support of a maximum ceiling mass of 12 kg/m$^2$.

ii) Where hanging beam spans are not the same each side of the counter beam, the average of the spans may be used.

iii) Minimum bearing length = 70 mm at end supports.

iv) For design parameters refer to Figure 2.

# Span Tables - Ridge and Intermediate Beams

| Table 18: Ply Box Single Span Ridge and Intermediate Beam | | | | | | | | | | | |
|---|---|---|---|---|---|---|---|---|---|---|---|
| Flanges: 90 x 45 mm, Ply webs: 7mm F8, Wind Classification: N1, N2 & N3 | | | | | | | | | | | |
| Chord Stress Grade | Box Beam Depth (mm) | Sheet Roof | | | | | | | | | |
| | | Roof Load Width | | | | | | | | | |
| | | 2700 | 3000 | 3300 | 3600 | 3900 | 4200 | 4500 | 4800 | 5100 | 5400 |
| | | Maximum Beam Span (mm) | | | | | | | | | |
| F5 | 400 | 3000 | 2900 | 2800 | 2700 | 2600 | 2500 | 2400 | 2300 | 2200 | 2200 |
| F5 | 600 | 4000 | 3900 | 3700 | 3600 | 3500 | 3400 | 3300 | 3200 | 3100 | 3000 |
| F5 | 800 | 4900 | 4700 | 4500 | 4400 | 4200 | 4100 | 4000 | 3900 | 3800 | 3700 |
| F5 | 1200 | 6300 | 6000 | 5800 | 5700 | 5500 | 5300 | 5200 | 5100 | 5000 | 4900 |
| MGP 10 | 400 | 3100 | 2900 | 2800 | 2700 | 2600 | 2500 | 2400 | 2300 | 2200 | 2100 |
| MGP 10 | 600 | 4200 | 4000 | 3800 | 3700 | 3600 | 3400 | 3300 | 3200 | 3100 | 3100 |
| MGP 10 | 800 | 5000 | 4800 | 4700 | 4500 | 4300 | 4200 | 4100 | 4000 | 3900 | 3800 |
| MGP 10 | 1200 | 6500 | 6200 | 6000 | 5800 | 5600 | 5500 | 5300 | 5200 | 5100 | 4900 |
| LVL 10 | 400 | 3100 | 2900 | 2800 | 2700 | 2600 | 2500 | 2400 | 2300 | 2200 | 2100 |
| LVL 10 | 600 | 4200 | 4000 | 3800 | 3700 | 3600 | 3400 | 3300 | 3200 | 3100 | 3100 |
| LVL 10 | 800 | 5000 | 4800 | 4700 | 4500 | 4300 | 4200 | 4100 | 4000 | 3900 | 3800 |
| LVL 10 | 1200 | 6500 | 6200 | 6000 | 5800 | 5600 | 5500 | 5300 | 5200 | 5100 | 4900 |
| MGP 12 | 400 | 3100 | 3000 | 2800 | 2700 | 2600 | 2500 | 2400 | 2300 | 2200 | 2200 |
| MGP 12 | 600 | 4200 | 4000 | 3900 | 3700 | 3600 | 3500 | 3400 | 3300 | 3200 | 3100 |
| MGP 12 | 800 | 5100 | 4900 | 4700 | 4600 | 4400 | 4300 | 4100 | 4000 | 3900 | 3800 |
| MGP 12 | 1200 | 6600 | 6400 | 6100 | 5900 | 5700 | 5600 | 5400 | 5300 | 5100 | 5000 |
| F17 | 400 | 3100 | 3000 | 2800 | 2700 | 2600 | 2500 | 2400 | 2300 | 2200 | 2200 |
| F17 | 600 | 4300 | 4100 | 3900 | 3700 | 3600 | 3500 | 3400 | 3300 | 3200 | 3100 |
| F17 | 800 | 5200 | 5000 | 4800 | 4600 | 4400 | 4300 | 4200 | 4000 | 3900 | 3800 |
| F17 | 1200 | 6700 | 6400 | 6200 | 6000 | 5800 | 5600 | 5400 | 5300 | 5200 | 5000 |

**Notes**

i) Maximum spans are based on the support of roof or roof plus ceiling mass for a cathedral roof. For guidance on roof and ceiling mass refer to Appendix A, AS1684.2.

ii) No birdsmouth or notching allowed.

iii) Minimum bearing length = 35 mm at end supports and 70 mm at intermediate supports

# Span Tables - Ridge and Intermediate Beams

| Table 19: Ply Box Single Span Ridge and Intermediate Beam | | | | | | | | | | | |
|---|---|---|---|---|---|---|---|---|---|---|---|
| Flanges: 90 x 45 mm, Ply webs: 7mm F8, Wind Classification: N1, N2 & N3 | | | | | | | | | | | |
| Chord Stress Grade | Box Beam Depth (mm) | Tile Roof | | | | | | | | | |
| | | Roof Load Width | | | | | | | | | |
| | | 2700 | 3000 | 3300 | 3600 | 3900 | 4200 | 4500 | 4800 | 5100 | 5400 |
| | | Maximum Beam Span (mm) | | | | | | | | | |
| F5 | 400 | 3000 | 2900 | 2800 | 2700 | 2600 | 2500 | 2400 | 2200 | 2100 | 1900 |
| F5 | 600 | 4000 | 3900 | 3700 | 3600 | 3500 | 3400 | 3300 | 3000 | 2900 | 2700 |
| F5 | 800 | 4900 | 4700 | 4500 | 4400 | 4200 | 4100 | 4000 | 3900 | 3600 | 3400 |
| F5 | 1200 | 6300 | 6000 | 5800 | 5700 | 5500 | 5300 | 5200 | 5100 | 4900 | 4600 |
| MGP 10 | 400 | 3100 | 2900 | 2800 | 2700 | 2600 | 2400 | 2200 | 2000 | 1900 | 1800 |
| MGP 10 | 600 | 4200 | 4000 | 3800 | 3700 | 3600 | 3400 | 3300 | 3100 | 2900 | 2700 |
| MGP 10 | 800 | 5000 | 4800 | 4700 | 4400 | 4300 | 4200 | 4100 | 4000 | 3700 | 3500 |
| MGP 10 | 1200 | 6500 | 6200 | 6000 | 5800 | 5600 | 5500 | 5300 | 5100 | 4900 | 4600 |
| LVL 10 | 400 | 3100 | 2900 | 2800 | 2700 | 2600 | 2400 | 2200 | 2000 | 1900 | 1800 |
| LVL 10 | 600 | 4200 | 4000 | 3800 | 3700 | 3600 | 3400 | 3300 | 3200 | 3100 | 2900 |
| LVL 10 | 800 | 5000 | 4800 | 4700 | 4500 | 4300 | 4200 | 4100 | 4000 | 3900 | 3700 |
| LVL 10 | 1200 | 6500 | 6200 | 6000 | 5800 | 5600 | 5500 | 5300 | 5200 | 5000 | 4600 |
| MGP 12 | 400 | 3100 | 3000 | 2800 | 2700 | 2600 | 2500 | 2400 | 2300 | 2100 | 2000 |
| MGP 12 | 600 | 4200 | 4000 | 3900 | 3700 | 3600 | 3500 | 3400 | 3200 | 3000 | 2800 |
| MGP 12 | 800 | 5000 | 4900 | 4700 | 4600 | 4400 | 4300 | 4100 | 4000 | 3800 | 3600 |
| MGP 12 | 1200 | 6500 | 6400 | 6100 | 5900 | 5700 | 5600 | 5400 | 5300 | 5100 | 4600 |
| F17 | 400 | 3100 | 3000 | 2800 | 2700 | 2600 | 2500 | 2400 | 2300 | 2200 | 2100 |
| F17 | 600 | 4300 | 4100 | 3900 | 3700 | 3600 | 3500 | 3400 | 3300 | 3100 | 3000 |
| F17 | 800 | 5200 | 5000 | 4800 | 4600 | 4400 | 4300 | 4200 | 4000 | 3900 | 3800 |
| F17 | 1200 | 6700 | 6400 | 6200 | 6000 | 5800 | 5600 | 5400 | 5200 | 4900 | 4600 |

**Notes**

i) Maximum spans are based on the support of roof or roof plus ceiling mass for a cathedral roof. For guidance on roof and ceiling mass refer to Appendix A, AS1684.2.

ii) No birdsmouth or notching allowed.

iii) Minimum bearing length = 35 mm at end supports and 70 mm at intermediate supports.

# Discover more ways to build your knowledge of wood

If you need technical information or inspiration on designing and building with wood, you'll find WoodSolutions has the answers. From technical design and engineering advice to inspiring projects and CPD linked activities, WoodSolutions has a wide range of resources and professional seminars.

**www.woodsolutions.com.au**

Your central resource for news about all WoodSolutions activities and access to more than three thousand pages of online information and downloadable publications.

**Technical Publications**

A suite of informative, technical and training guides and handbooks that support the use of wood in residential and commercial buildings.

**WoodSolutions Tutorials**

A range of practical and inspirational topics to educate and inform design and construction professionals. These free, CPD related, presentations can be delivered at your workplace at a time that suits you.

**Seminars and Events**

From one day seminars featuring presentations from leading international and Australian speakers to international tours of landmark wood projects, WoodSolutions offer a range of professional development activities.

**What is WoodSolutions?**

Developed by the Australian forest and wood products industry for design and building professionals, WoodSolutions is a non-proprietary source of information from industry bodies, manufacturers and suppliers.

Wood Solutions™
design and build
woodsolutions.com.au